RL-31

DEHUMIDIFIER

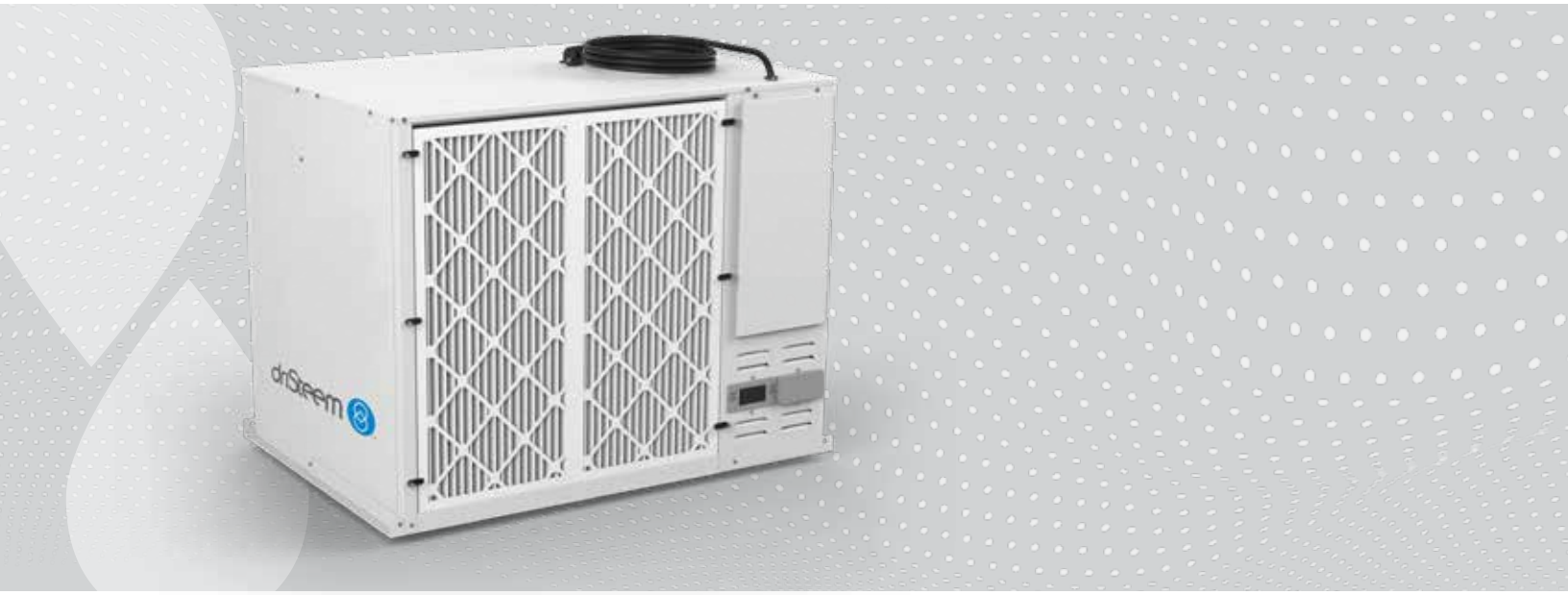

Installation, Operation, and Maintenance Manual

Read and save these instructions

driSteem

Warnings and cautions

⚠ WARNING	CAUTION
Indicates a hazardous situation that could result in death or serious injury if instructions are not followed.	Indicates a hazardous situation that could result in damage to or destruction of property if instructions are not followed.

⚠ WARNING

- High voltage may cause serious injury from electric shock. Disconnect electrical power before starting installation or servicing. Leave power disconnected until installation/service is completed.
- Sharp edges may cause serious injury from cuts. Use care when cutting plenum openings and handling duct work.
- Dropping may cause personal injury or equipment damage. Handle with care and follow installation instructions.

⚠ CAUTION

- Read all instructions before beginning installation.
- This appliance is not intended for use by persons (including children) with reduced physical, sensory or mental capabilities, or lack of experience and knowledge, unless they have been given supervision or instruction concerning use of the appliance by a person responsible for their safety. Children should be supervised to ensure that they do not play with the appliance.
- Do not use in pool applications. Pool chemicals can damage the dehumidifier.
- Do not use solvents or cleaners on or near the circuit board. Chemicals can damage circuit board components.
- Wait 24 hours before running the unit if it was not shipped or stored in the upright position.
- If the supply cord is damaged, it must be replaced by the manufacturer, its service agent or similarly qualified persons in order to avoid a hazard.
- If hard wiring the appliance, install a disconnect within eyesight of the appliance which provides full disconnection under overvoltage category III conditions. Refer to local and national codes and full instructions on page 16.

Table of contents

ATTENTION INSTALLER
Read this manual before installing.
Leave manual with product owner.

DriSteem® Technical Support
800-328-4447

WHERE TO FIND MORE INFORMATION

Our web site:

The following documents are available on our web site: www.dristeem.com
- CDS Dehumidifier Brochure
- CDS Dehumidifier IOM

Call us at 800-328-4447

Obtaining documents from our web site is the quickest way to view our literature.

Learn More

Product overview

FIGURE 4-1: CDS DEHUMIDIFIER

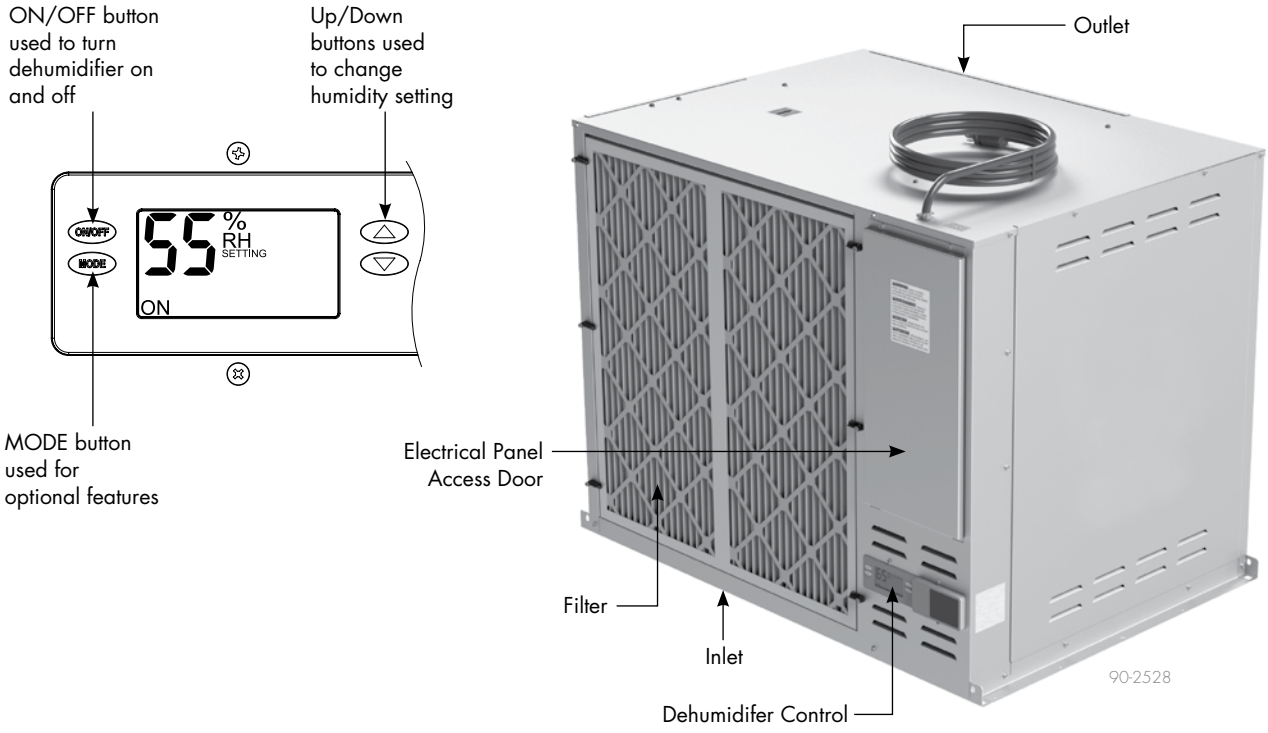

Models, capacities, and electrical specifications

Table 5-1:
RL Series Specifications

	Model RL-31	
Electrical		
Voltage	208 - 240 VAC, 1 Phase, 60 HZ	277 VAC, 1Phase, 60 HZ
Operating Current	19.6A @ 80°F (26.7°C), 60% RH, 240 VAC	17.4A @ 80°F (26.7°C), 60% RH, 277 VAC
Rated Current	24A (install on dedicated 30A circuit)	
Efficiency	3.0 L/kWh @ 80°F (26.7°C), 60% RH, 240 VAC	
Environmental		
Operating Temperature Range	50°F to 104°F (10°C to 40°C), 60°F (15.6°C) @ 40% RH to 85°F (29.4°C) @ 80% RH (ideal conditions for unit to not go into defrost or shut down due to high pressure)	
Operating Dew Point Lower Limit	36°F (2°C)	
Mechanical		
Dimensions	Width 44.88″ (1140 mm) Height 34.41″ (874 mm) Length 31.72″ (806 mm)	
Weight	360 lbs (163 kg) (without packaging)	
Drain Size	3/4" FNPT (DN 20)	
Capacity	89 gallons/day @ 80°F (337 Liters/day @ 26.7°C), 60% RH (31 lbs/hr)	
Filter	MERV 11 (30" x 32" x 2")	
Airflow	1760 CFM (2990 m^3/h) (free flow)	
Power cord	Units shipped with 10' (3m) power cord or can be hard wired.	
Controls		
Dehumidifier control	50°F and 104°F (10°C to 40°C) cut off	
External control	Off on high/low pressure	

Dimensions

FIGURE 6-1: CDS DEHUMIDIFIER DIMENSIONS

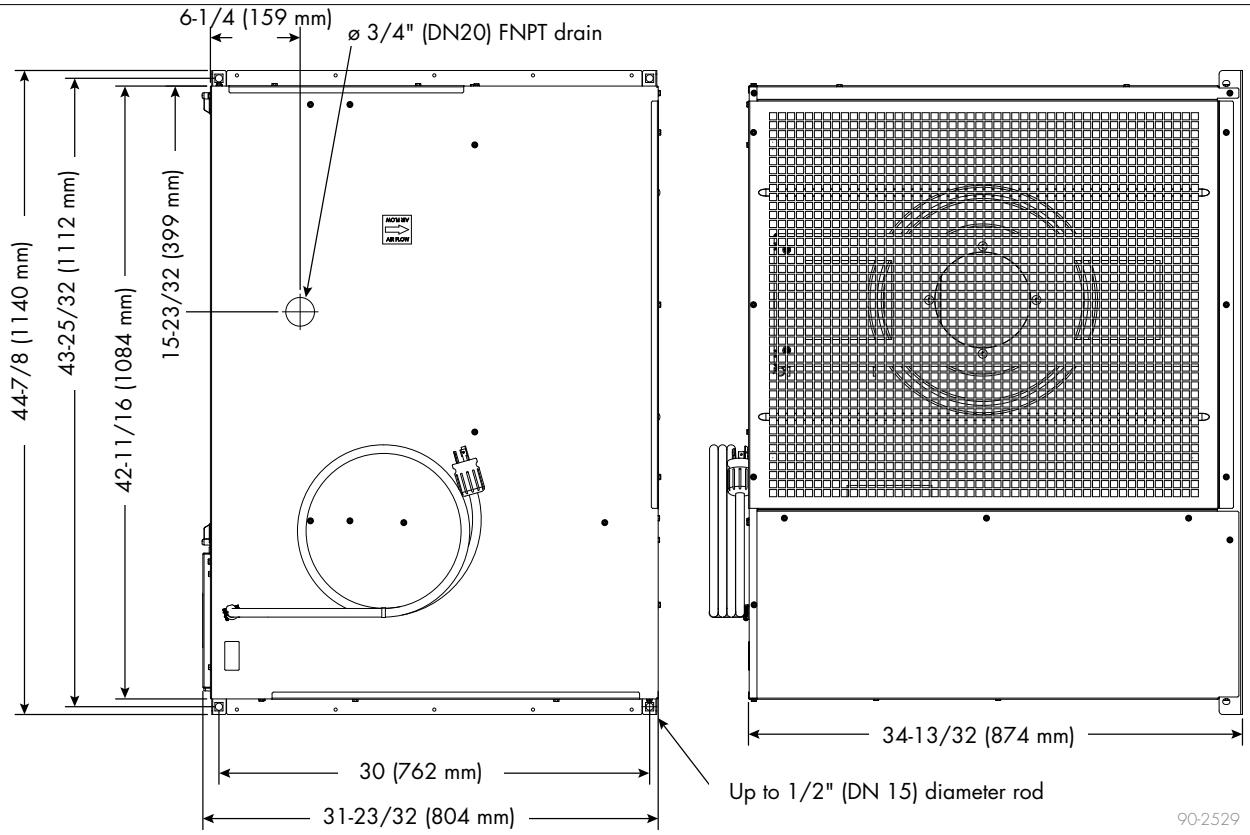

TOP **BACK**

Selecting a location

UNPACKING THE DEHUMIDIFIER

Disassemble the carton, but leave the unit attached to the pallet for installing the unit with a forklift or scissors lift.

INCLUDED IN THE CARTON

- Dehumidifier
- Installation manual
- 3/4" (DN20) P-Trap
- 3/4" MNPT x 3/4" (DN20 x 20 mm) female pipe
- 3/4" x 3/4" x 3/4" (DN20 x DN20 x DN20) T-fitting
- 30 feet of thermostat cable
- MERV 11 filter
- Model D77 control (ships separately, if selected)

LOCATION CONSIDERATIONS

This unit is not to be accessible to the general public. The dehumidifiers should be spaced evenly throughout the area to be dehumidified with the following recommendations:

1. Avoid placement where the discharge of one dehumidifier is pointing toward the inlet of another.
2. Avoid locating the dehumidifier inlet too near a supply register. Space is not usually available to totally avoid this, but minimizing the amount of cold air that is discharged to the dehumidifier inlet will improve moisture removal performance of the dehumidifier.
3. Account for handling dehumidifier condensate by considering drain or condensate pump locations.
4. Leave 18" (457 mm) minimum clearance for access to the user interface, electrical panel for service and filter for maintenance.

FIGURE 7-1: SPACE CLEARANCES

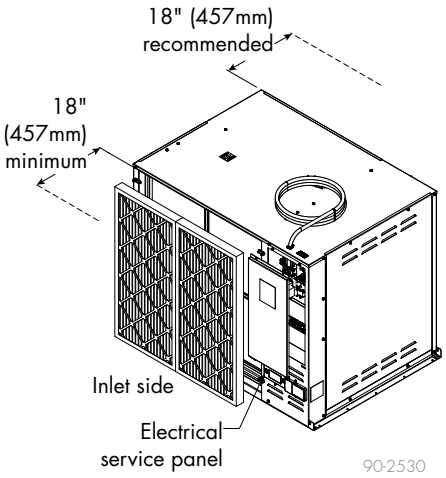

FIGURE 7-2: D77 CONTROLLER

Mounting

FLOOR MOUNTING

The leveling feet kit (not included) is required for floor mounting. The drain hose/pipe must continuously slope downward toward the drain. Use solid supports as needed to elevate the unit enough to allow for continuous drain slope. Use the adjustable feet to level the unit right to left and front to back so that unit drains properly.

FIGURE 8-1: FLOOR MOUNTING USING LEVELING FEET KIT (PART #: 601175)

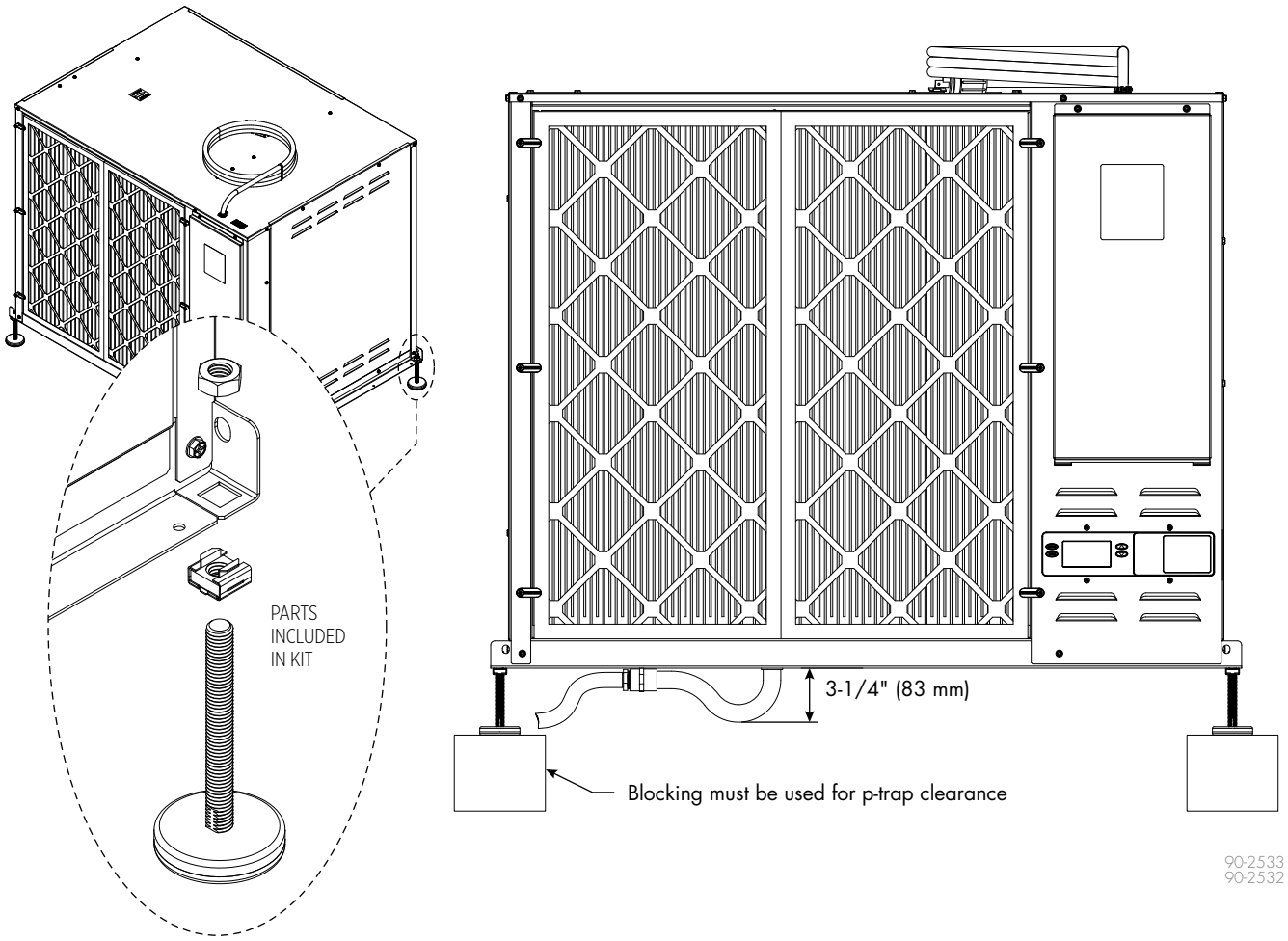

Mounting

HANGING THE DEHUMIDIFIER

Use 3/8" (10 mm) or 1/2" (12 mm) threaded rod to suspend the unit from appropriate ceiling structure (see Figure 9-1). The unit weight is 360 lbs (163 kg). Install vibration isolators if located in an area where noise could be a concern. Level unit right to left and front to back so that unit drains properly. **IMPORTANT: Install lock nuts to secure the dehumidifier to the threaded rod as shown in Figure 9-2.**

DUCTING

Use duct kit (Part #: 601177) for installing ductwork to the dehumidifier. Reference the instructions provided with the duct kit for installation details.

FIGURE 9-1: SUSPENSION

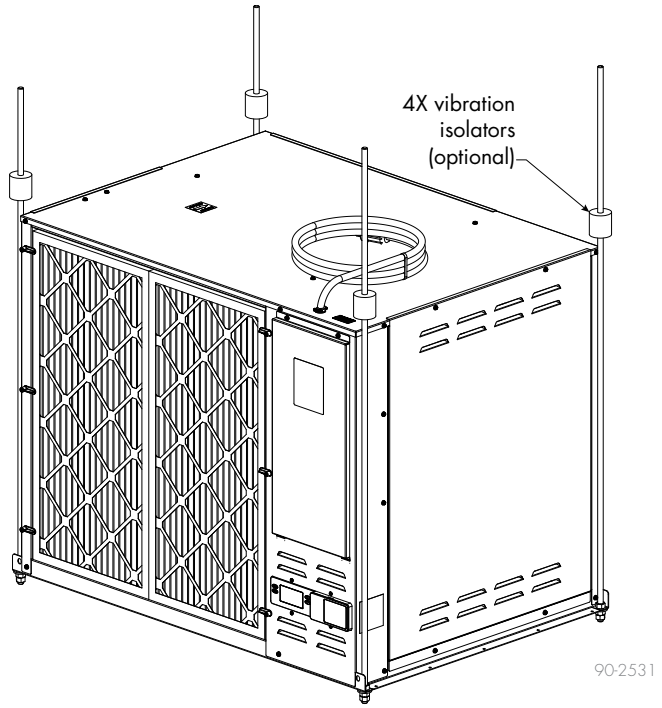

FIGURE 9-2: SECURE BRACKET TO DEHUMIDIFIER

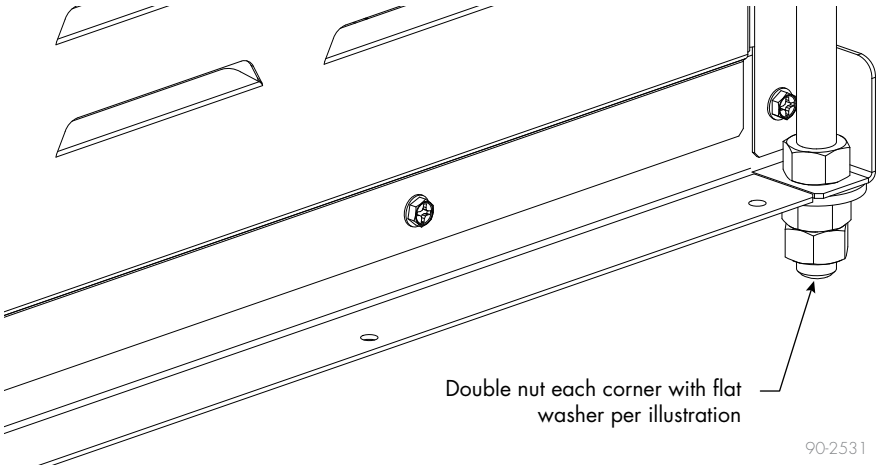

Drain installation

The blower draws air through the dehumidifier, putting the cabinet under negative pressure. As a result, the included P-trap is required for proper draining. The installed drain fitting on the dehumidifier is 3/4" (DN20) FNPT. Use the included fittings to trap and install the drain. See Figure 10-1. The drain tubing can be hard pipe or flexible tubing. **NOTE:** PTFE thread seal tape is recommended for the threaded connections and hand tighten only. Use PVC primer and cement for all slip fit connections to prevent leaks. After installing the drain connections, trap, and tubing, pour enough water, about 32 oz. (950 mL) into the dehumidifier drain pan to prime the trap.

If the drain tubing will be installed to a condensate pump, or if a common drain tube will serve multiple dehumidifiers or air conditioners, a vacuum breaker is recommended to prevent the p-trap from being unintentionally siphoned. Install a T-fitting with a short section of drain tubing pointed vertically and extending above the start of the filter (see Figure 10-1). Install the vacuum breaker after the P-trap.

FIGURE 10-1: DRAIN ASSEMBLY

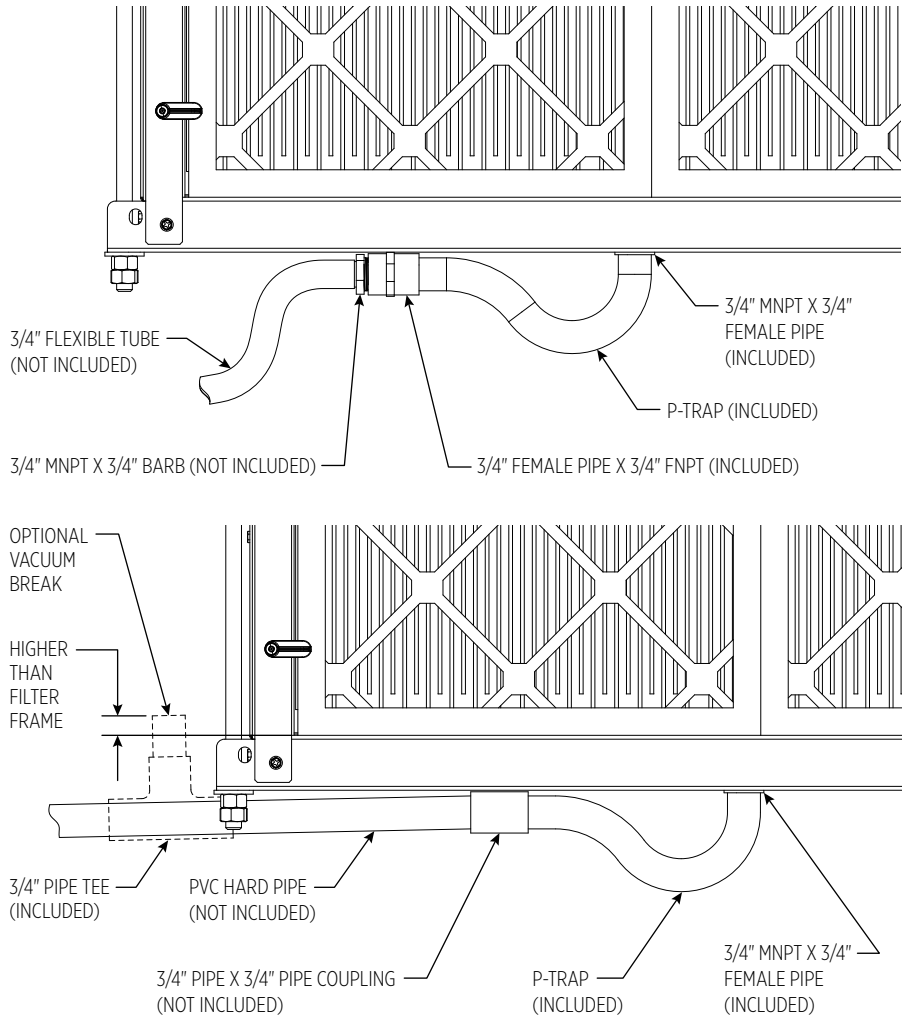

Drain installation

CONDENSATE PAN, CONDENSATE PUMP AND FLOAT SWITCH

A condensate pan is recommended when suspending the dehumidifier over finished areas or product. Adhere to local codes regarding draining of the condensate pan. If a condensate pump is needed, install it in the condensate pan (user provided) as well.

Install a condensate overflow safety switch (i.e. float switch) in the condensate pan (user provided), remove the factory installed jumper wire between the Float Switch terminals on the control and wire the float switch to the dehumidifier as shown in Figure 11-1. Overflow safety switches on condensate pumps can be wired to the Float Switch terminals in a similar fashion.

FIGURE 11-1: FLOAT SWITCH WIRING TO USER INTERFACE

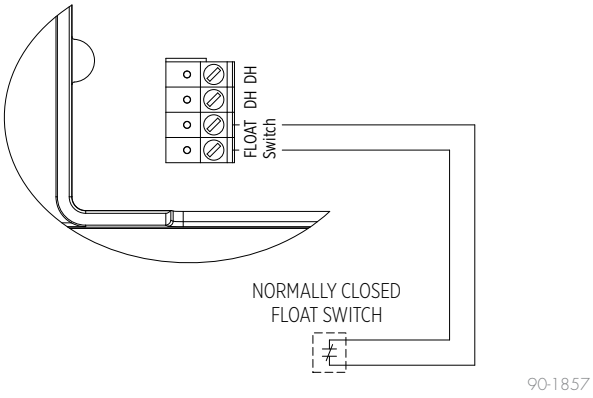

Round duct

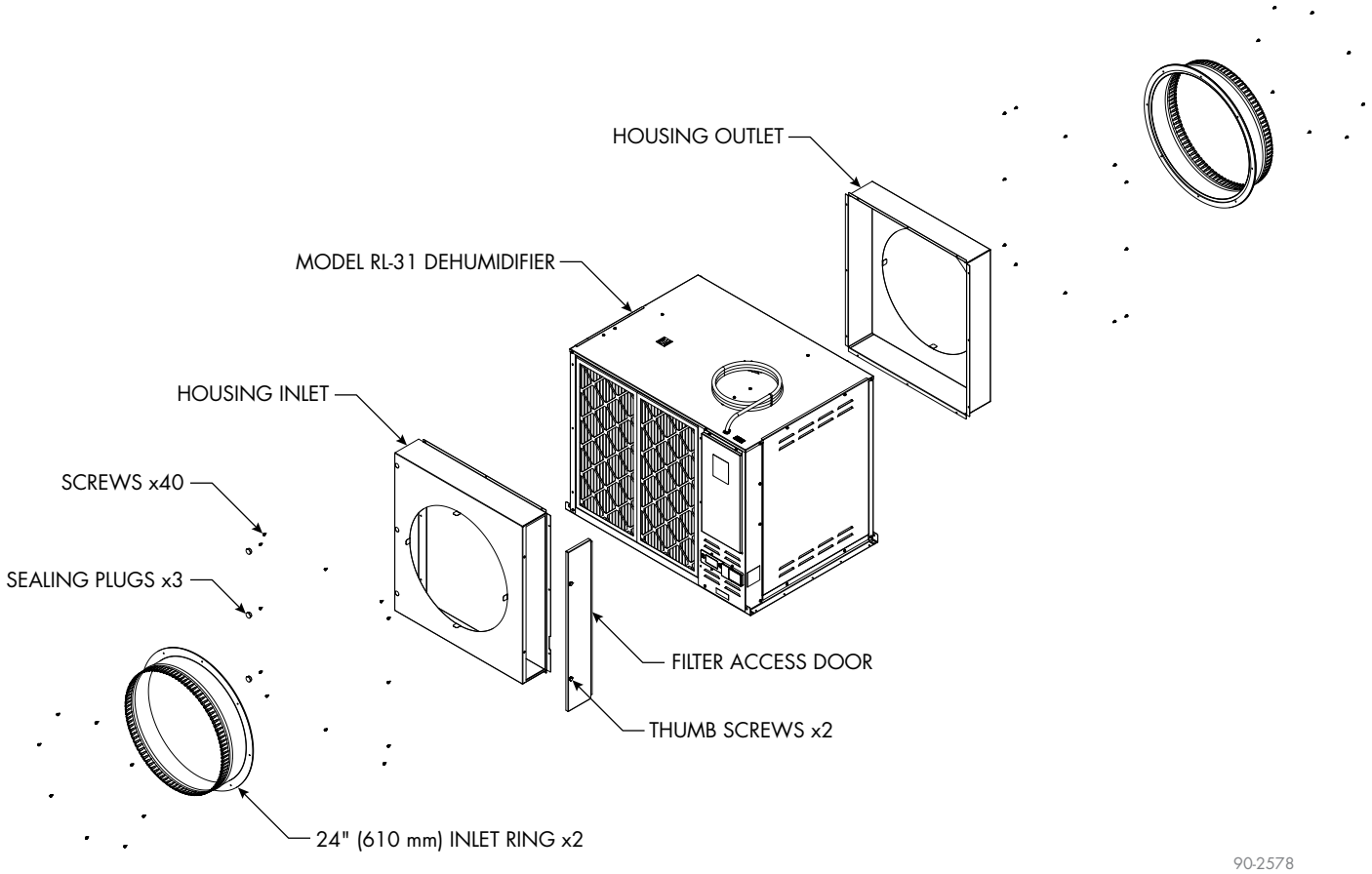

⚠ CAUTION

Sharp edges may cause serious injury from cuts. Use care when cutting plenum openings and handling duct work.

NOTICE

- Failure to follow ducting guidelines may negatively impact unit performance.
- Minimize equivalent duct length to maximize unit capacity and efficiency.

AIRFLOW DELIVERY SPECIFICATIONS

- Nominal airflow through dehumidifier is 1760 cfm (2911 m^3/h).
- Airflow decreases as duct length and bends increase, therefore if the equivalent duct length is too long the dehumidifier will cease to function properly.

Round duct

DUCT SIZING AND ROUTING

- Inlet and outlet collars fit 24" (610 mm) round duct.
- Unit performance decreases as airflow decreases, the shortest possible duct lengths with minimal bends should be used.
- Do not exceed 1,000 feet (305 m) of metal duct or 750 feet (229 m) of flex duct.

Table 13-1:
Equivalent length of bends

45° bend	5 feet (1.5 m)
90° bend	10 feet (3.0 m)
180° bend	30 feet (9.1 m)

- Max static pressure is 0.6" w.c. (149 Pa).
- Install the dehumidifier in location where filter door, service access panel, compressor side panel, and user interface are accessible.
- Do not install a bend in the ductwork within 2 feet (0.6 m) of the dehumidifier inlet or outlet.
- When selecting duct material, it is preferred to use metal ducting to maintain airflow. If flex duct is to be used, ensure it is extended out as much as possible to limit disruptions to the airflow. Note: Use only insulated ducting when the inlet side of the duct work is located outside of the conditioned space. In some instances when the dehumidifier is placed outside of the conditioned space, the cabinet of the dehumidifier may also need to be insulated to prevent condensation formation on the exterior of the unit.
- Do not duct more than one dehumidifier together. See Figure 13-1.
- If using registers and diffusers, the total open area must be at least 453 in^2 (0.3m^3), which is the equivalent area to a 24 inch (610 mm) round.
- When locating registers and diffusers be aware of the following;
  - Relative to other dehumidifier inlets/outlets – must be a minimum 10 feet (3 m) apart and do not direct toward one another.
  - Relative to HVAC diffusers – ensure minimum 10 foot (3 m) distance from other HVAC diffusers.
  - For agriculture applications – do not directly vent onto plants.
- Ensure that the ductwork is supported within 2 feet (0.6 m) of inlet and outlet of the dehumidifier. Consult building codes and standards for duct support requirements beyond 2 feet (0.6 m) of the dehumidifier.

FIGURE 13-1: DO NOT DUCT MORE THAN ONE DEHUMIDIFIER IN SERIES

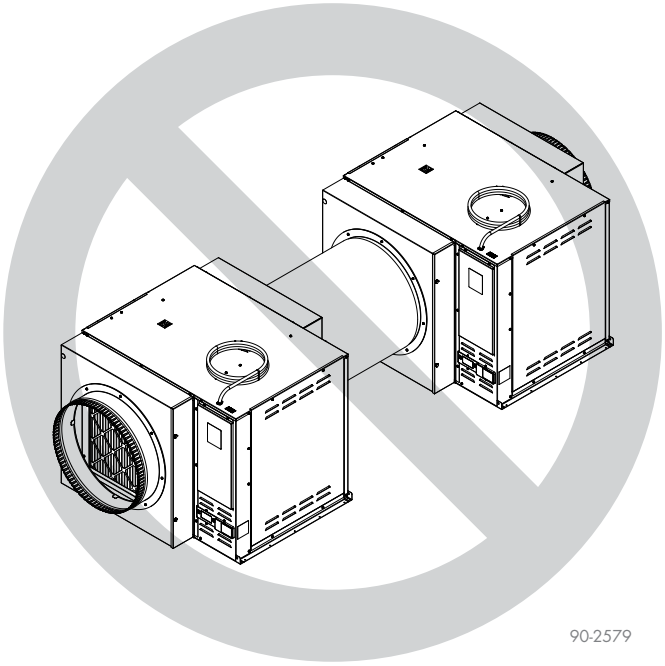

Round duct

DUCT KIT INSTALLATION

1. On each housing, bend the four alignment tabs so they are protruding out of the front as shown. These are to be used as alignment features for the 24" (610 mm) collar. See Figure 14-1.
2. Attach the assembled duct housing to the dehumidifier using screws provided. Additional holes will need to be made in the cabinet where holes did not previously exist. To properly seal the unit, use a 5/32" (4 mm) bit to pre-drill holes and use the screws provided. If you choose to use self drilling screws, make sure they are no longer than 1" (25 mm). To secure the 3 screws on the left side of the duct kit (opposite the filter access door), a bit extension of at least 6" (152 mm) is required. After securing all screws, insert the sealing plugs provided into the access holes on the left hand side. See Figure 14-2.
3. Install the filter access door and secure with the two thumb screws. See Figure 14-3.

FIGURE 14-1: ALIGN TABS

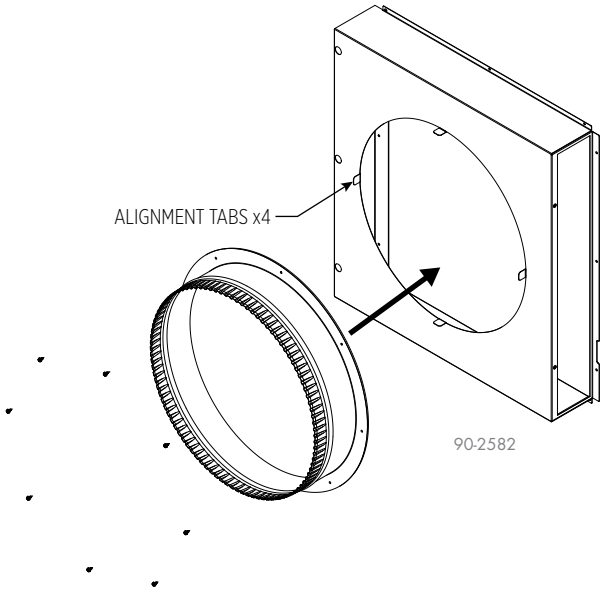

FIGURE 14-2: ATTACH ASSEMBLED DUCT HOUSING

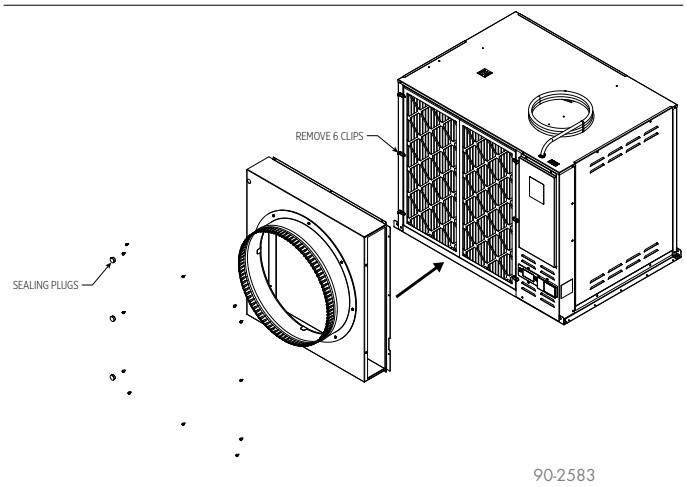

FIGURE 14-3: INSTALL

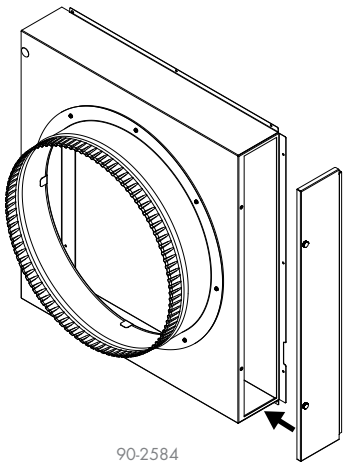

Round duct

REPLACING THE FILTER

1. Loosen the two thumb screws and remove the filter access door.
2. Pull the filter away from the unit, then out through the access opening.
3. Install the new filter in the same direction.
4. Reinstall the filter access door and tighten the thumb screws.

FIGURE 15-1: OVERALL DIMENSIONS WITH DUCT KIT (INCHES)

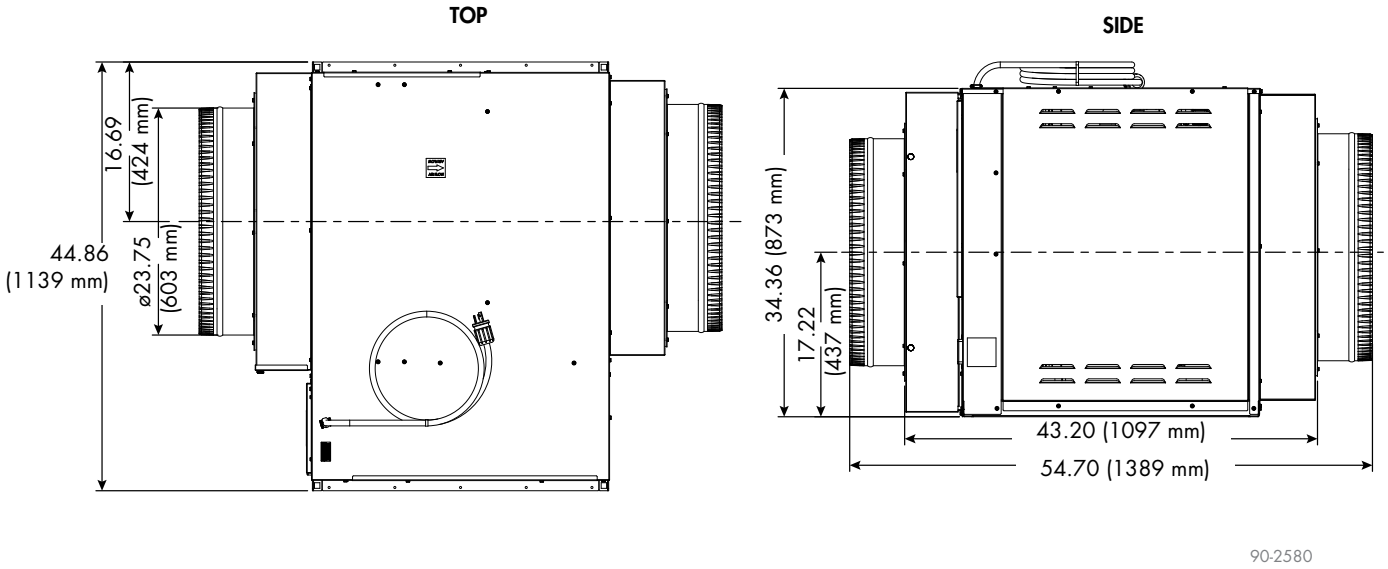

Hard wire - line voltage

United States Installation: Make all electrical connections in accordance with the current edition of the NEC ANSI/NFPA 70 and any local codes or ordinances that may apply.

Canada Installation: Make all electrical connections in accordance with the current edition of the Canadian Electrical Code CSA C22.1 and any local codes or ordinances that may apply.

The RL-31 dehumidifier comes with a power cord that has a NEMA L6-30 plug that can simply be plugged into a corresponding NEMA L6-30 receptacle. See Figure 16-1 for power cord wiring connections. The plug can be removed and replaced by hard-wired electrical service if desired.

1. Disconnect electrical service at the main fuse or circuit breaker.
2. Run electrical service to where the dehumidifier is to be installed following all required local and national codes and standards.
3. Remove the electrical service panel (see Figure 16-2).
4. Depress the levers of the terminal blocks mounted on the MOV board to disconnect the black and white power cord wires.
5. Remove the screw securing the power cord ground wire to the cabinet.
6. Route the service wires through the opening in the dehumidifier and secure the cable or conduit to the opening in the dehumidifier using fittings/ clamps intended for the conduit/cable used.
7. Insert the black service wire into the L1 terminal and the white service wire into the L2 terminal. Release levers to lock into place.
8. Insert the ground wire (bare or green) of the electrical service into the ground lug and secure it in place by tightening the ground lug screw.
9. Reattach the electrical service panel to the dehumidifier.
10. Restore electrical service at the fuse or circuit breaker.

Table 16-1: Electrical specifications

	Model RL-31	
Voltage	208 - 240 VAC, single phase, 60Hz	277 VAC, single phase, 60Hz
Recommended Breaker Size	30A	30A
Recommended Wire Gauge	10 Gauge, Copper	10 Gauge, Copper
Maximum Fuse or Breaker Size (MOC)	40A at 208V 35A at 240V	30A
Minimum Circuit Ampacity (MCA)	28A at 208V 25A at 240V	21A

CAUTION

If the supply cord is damaged, it must be replaced by the manufacturer, its service agent or similarly qualified persons in order to avoid a hazard.

FIGURE 16-1: POWER CORD WIRING

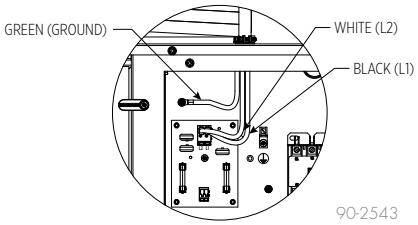

FIGURE 16-2: HARD WIRING TO REPLACE THE POWER CORD

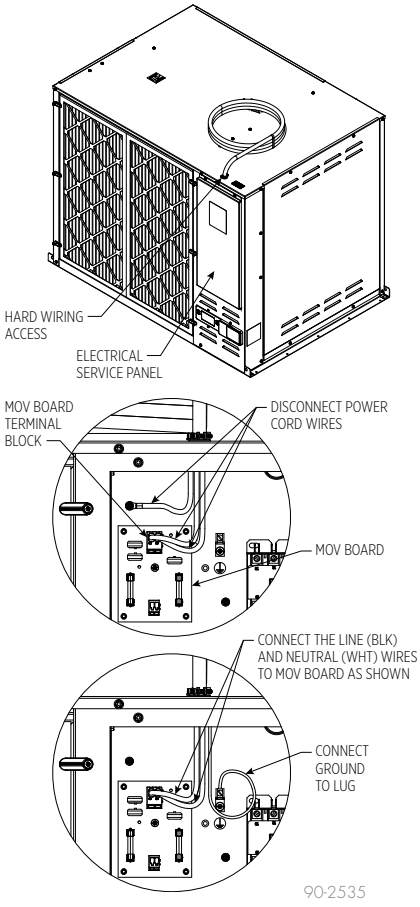

System set-up & checkout

INSTALLER TEST MODE

If everything is properly wired, the dehumidifier and all of the wired components will turn on and off during Installer Test Mode to demonstrate that all are properly operating. Installer Test Mode lasts for four (4) minutes. If the ON/OFF button is pressed during test mode, the dehumidifier will exit Installer Test Mode and return to the OFF screen.

1. If the dehumidifier is not already OFF, press the ON/OFF button to turn it off (see Figure 17-1).
2. Press and hold the ON/OFF button and MODE buttons for 3 seconds. The measured humidity, AIR SAMPLING and TEST will show on the display (see Figure 17-2).
3. After three (3) minutes the dehumidifier compressor will turn on and DEHUMIDIFYING will replace AIR SAMPLING on the control screen (see Figure 17-3).

After one minute of compressor operation, all outputs will turn off and DONE (Figure 17-4) will blink for 3 seconds and then return to the OFF screen (Figure 17-5).

FIGURE 17-1: DISPLAY SCREEN OFF

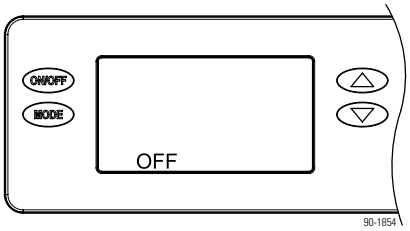

FIGURE 17-2: AIR SAMPLING TEST

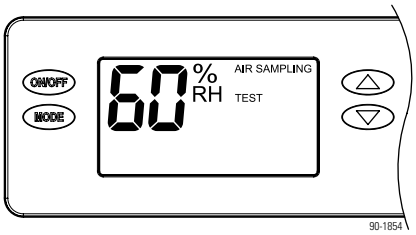

FIGURE 17-3: DEHUMIDIFYING

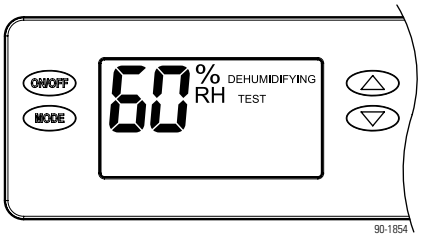

FIGURE 17-4: DISPLAY SCREEN DONE

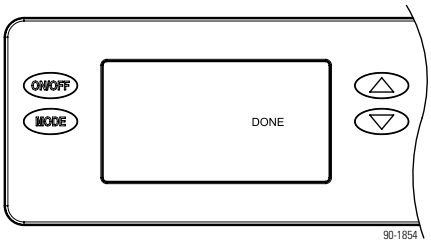

FIGURE 17-5: DISPLAY SCREEN OFF

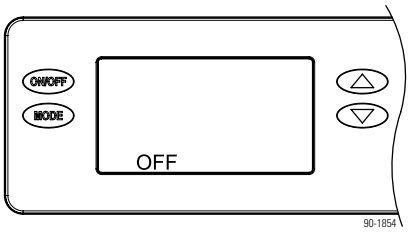

System set-up & checkout

- A Model D77 or other external control is to be installed
- Changing the air sampling rate (see instructions below)

1. Check all wiring.
2. Make sure the wire access cover has been snapped back onto the on-board control.
3. Plug unit in and turn power switch to ON.
4. The on-board control screen should display OFF (see Figure 18-1).

NOTE: If the display backlight is not on, the first button press (any button) will only turn on the backlight. Press the button a second time to achieve function.

5. Hold the MODE button on the on-board control for 3 seconds to enter the Installer Set-up Menu.
6. Navigate through the following screens to set up the dehumidifier for the installed application.

   Use the UP or DOWN arrows to select items and use MODE to switch to the next set-up option. To exit installer set-up, all options must be scrolled through using the MODE button.
7. After the installer set up options have been completed, DONE (see Figure 18-2) will blink for 3 seconds and the control will return to the OFF screen (see Figure 18-1).

   If remote control and external control are both disabled (default), the control will be by the on-board controller. Air sampling and RH Offset are MODE options only available with on-board control.

AIR SAMPLING

Use the UP or DOWN button to adjust how frequently the dehumidifier samples the air to determine whether or not to dehumidify. Fewer minutes means the dehumidifier will sample more frequently to minimize humidity swings, but increases cost to operate due to more frequent fan operation. Press MODE when done to move to the next screen (see Figure 18-3).

RH OFFSET

An offset can be applied to the on-board humidity reading to avoid discrepancies with other humidity measuring devices. Use the UP/DOWN arrows to select an offset from -5% to 5%. Press MODE to exit the installer set-up screens (see Figure 18-4).

FIGURE 18-1: DISPLAY SCREEN OFF

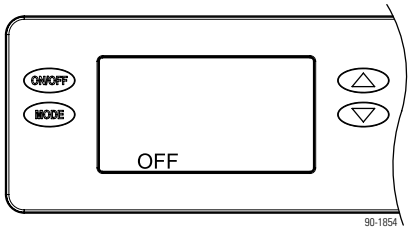

FIGURE 18-2: DISPLAY SCREEN DONE

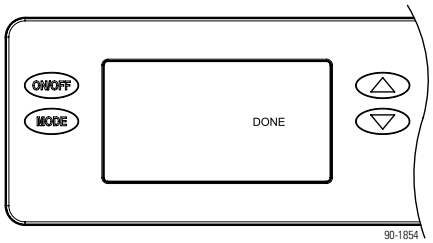

FIGURE 18-3: AIR SAMPLING

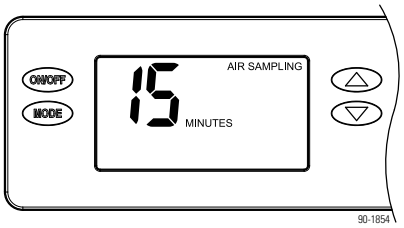

FIGURE 18-4: RH OFFSET

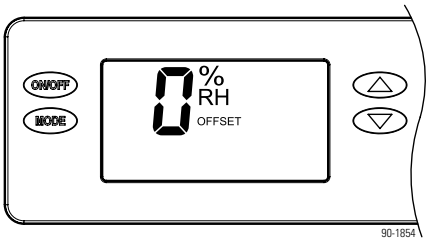

Wiring and setup

The Model D77 will measure the relative humidity and turn the dehumidifier on and off to control the humidity level to the desired setting. The humidity setting can be adjusted from the control, while the display allows easy access and monitoring of the humidity level in the space. Shield the Model D77 from direct exposure to HPS or LPS lighting.

NOTE: Use 18-22 AWG wire for control wiring.

Humidity can be controlled using the internal dehumidifier control, a Model D77 control, or a different external control like a thermostat.

Installing an external control eliminates the need to run the dehumidifier blower for sampling, as the control is constantly measuring the humidity. When the humidity level rises above the setting, the dehumidifier is turned on. With internal control, the sampling rate can be set to 15,30,45, or 60 minutes.

TO INSTALL AND USE THE MODEL D77 CONTROL, COMPLETE ALL STEPS:

1. Unplug the dehumidifier or turn off power to the circuit at the breaker or fuse.
2. Run thermostat cable (use 18-22 AWG wire) from the Model D77 to the control of the dehumidifier.
3. Trim about 1/4" (6 mm) of insulation from the end of the wires on each end. Insert the wire into the terminals as shown in Figure 19-1.
4. Restore dehumidifier power.

TO SET THE DEHUMIDIFIER TO USE THE MODEL D77 CONTROL, COMPLETE ALL

FIGURE 19-1: MODEL D77 REMOTE CONTROL WIRING

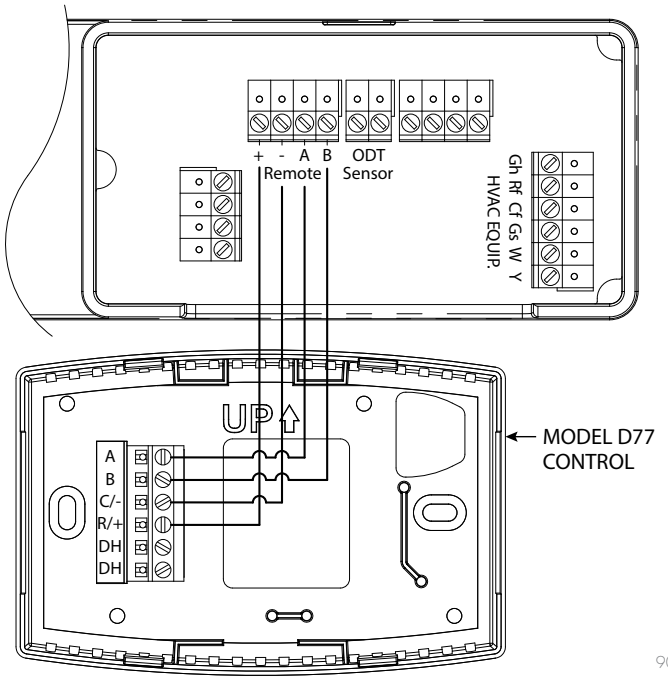

Wiring and setup

STEPS:

1. With power to the dehumidifier, use the ON/OFF button to set the dehumidifier to the OFF position.

   NOTE: If the display backlight is not on, the first button press (any button) will only turn the backlight on. Press the button a second time to achieve the desired function.

2. Hold the MODE button on the on-board control for three seconds to enter the Installer Set-up Menu.
3. The display should now read REMOTE on the left and DISABLED on the right. Use the UP or DOWN arrow buttons to set this to ENABLED.
4. Once the display reads REMOTE ENABLED, press the MODE button to cycle through the other settings until the display blinks DONE for three seconds.
5. Use the ON/OFF button to turn the dehumidifier ON. The display on your unit should read REMOTE.
6. Locate the Model D77 that you just set up. On the Model D77, press the ON button and use the arrow buttons to set your preferred %RH setpoint. When setting up in REMOTE mode for the first time, your dehumidifier will wait three minutes before starting to dehumidify, regardless of ambient conditions.

FIGURE 20-1: MODEL D77 REMOTE CONTROL WIRING

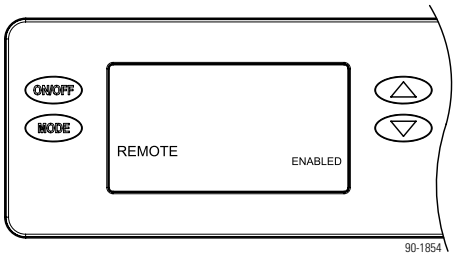

Alternative external control or DriSteem BACnet® dehumidistat

The DriSteem BACnet dehumidistat may be used to control the dehumidifier when set up as an external controller. Alternatively, use any other humidity control system as long as it has a dry contact, normally open output dedicated to controlling the dehumidifier. Reference the installation literature provided with the alternative control for wiring, set-up, and operating details.

TO INSTALL AND USE AN EXTERNAL CONTROL, COMPLETE ALL STEPS:

1. Unplug the dehumidifier or turn off power to the circuit at the breaker or fuse.
2. Run thermostat cable (use 18-22 AWG wire) from the alternative external control to the control of the dehumidifier.
3. Trim about 1/4" (6 mm) of insulation from the end of the wires on each end. Insert the wire into the terminals as shown in Figure 21-1.
4. Restore dehumidifier power.

FIGURE 21-1: EXTERNAL CONTROL WIRING

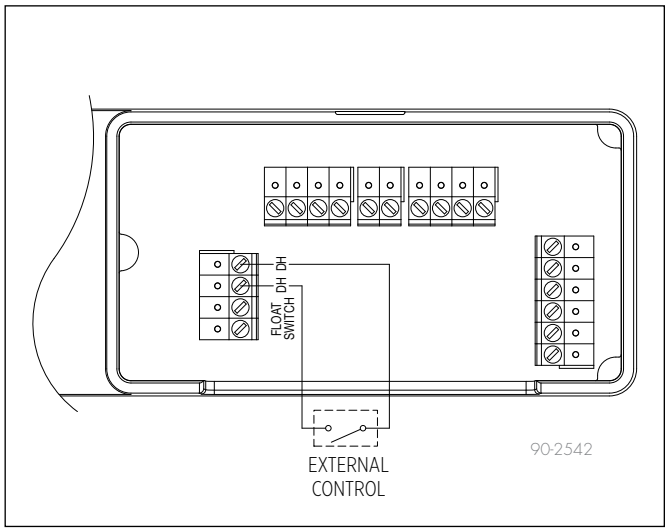

TO SET THE DEHUMIDIFIER TO USE THE ALTERNATIVE CONTROL, COMPLETE ALL STEPS:

1. With power to the dehumidifier, use the ON/OFF button to set the dehumidifier to the OFF position.

   NOTE: If the display backlight is not on, the first button press (any button) will only turn the backlight on. Press the button a second time to achieve the desired function.

2. Hold the MODE button on the on-board control for three seconds to enter the Installer Set-up Menu.
3. Press MODE again and the display should change to EXTERNAL in the center, and DISABLED on the right. Use the UP or DOWN arrow buttons to set this to ENABLED.

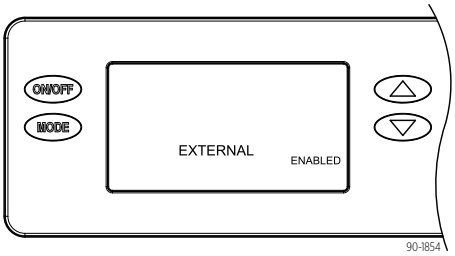

4. Once the display reads EXTERNAL ENABLED, press the MODE button to cycle through the other settings until the display blinks DONE for three seconds.
5. Use the ON/OFF button to turn the dehumidifier ON. The display on your unit should read external. Even if there is a demand for dehumidification according to your external control, the dehumidifier will wait three minutes before turning on for the first time only.

Daisy chain wiring

DriSteem dehumidifiers can be wired in a daisy chain application, allowing one Model D77 or alternate dry contact dehumidistat to control any number of dehumidifiers wired together.

MODEL D77 AS DRIVING CONTROL

When a Model D77 is used to control the first dehumidifier, Unit #1 must be set to Remote Enabled in the set-up menu. All downstream units must be set up to External Enabled in each set-up menu. See pages 19 through 21 for set up details, and wire as shown in Figure 22-1.

SEQUENCE OF OPERATION

Each unit in the daisy chain responds to the first unit being controlled by the D77. When the humidity level rises above the humidity setting, all units will dehumidify until the humidity measured by the D77 falls below the setting.

IMPORTANT: If the D77 or first dehumidifier experiences a fault or loses power, all downstream dehumidifiers will also stop function. If any dehumidifier in the daisy chain other than Unit #1 experiences a fault, that unit will stop operation as determined by the fault but all other units will continue operating. If any dehumidifier loses power, all downstream units will stop operating.

FIGURE 22-1: WIRING WITH D77 CONTROL

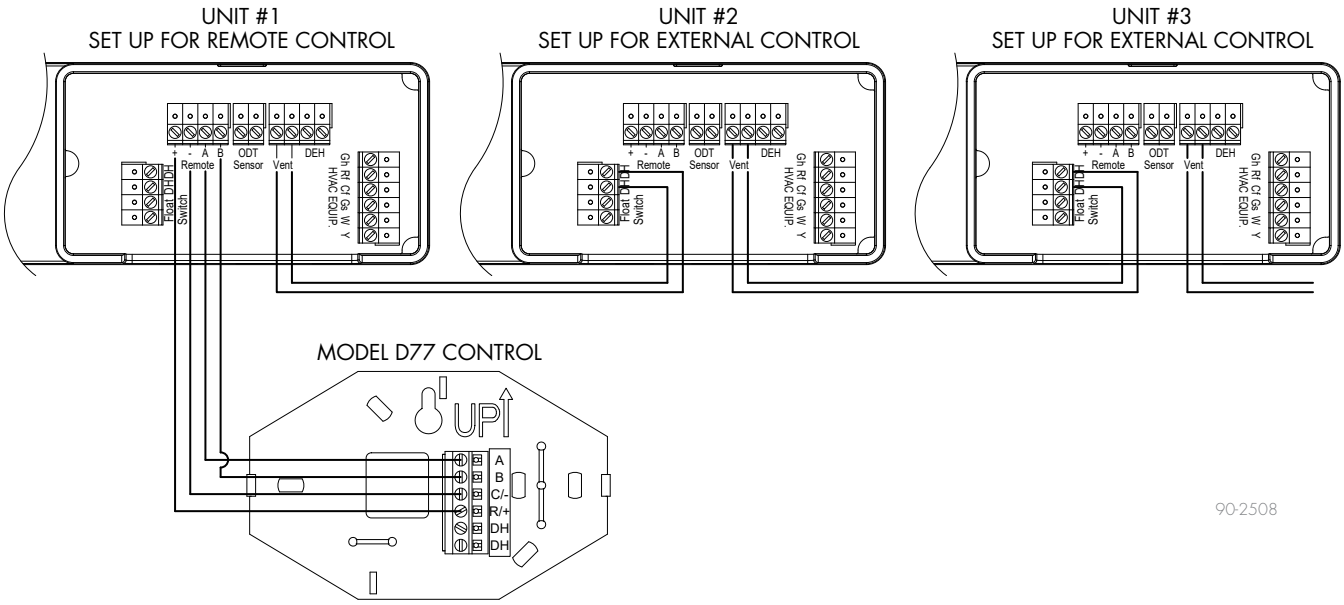

Daisy chain wiring

ALTERNATE EXTERNAL OR DRISTEEM BACNET DEHUMIDISTAT DRY CONTACT CONTROL AS DRIVING CONTROL

When a dry contact control is used to control the first dehumidifier, Unit #1 must be set to External Enabled in the set-up menu. All downstream units must be set up to External Enabled in each set-up menu. See page 21 for set up details and wire as shown in Figure 23.

SEQUENCE OF OPERATION

Each unit in the daisy chain responds to the first unit being controlled by the external control. When the humidity level rises above the humidity setting, all units will dehumidify until the humidity measured by the external control falls below the setting.

IMPORTANT: If the external control experiences a fault, all downstream dehumidifiers will also stop function. If any dehumidifier experiences a fault, that unit will stop operation as determined by the fault but all other units will continue operating. If any unit loses power, all downstream units will stop function.

FIGURE 23-1: WIRING WITH ALTERNATE EXTERNAL CONTROL

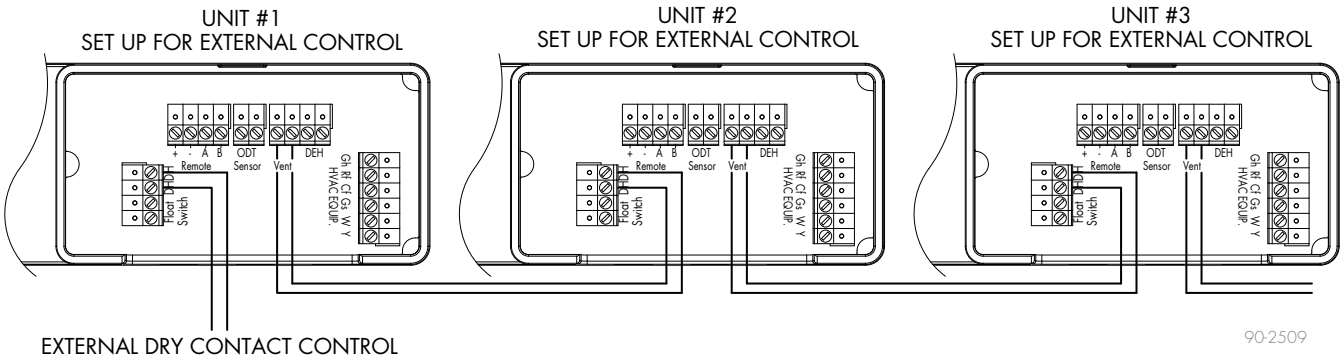

CODES (LOCATED ON BACK OF WIRE ACCESS COVER)

See the Installation Instructions for troubleshooting error codes. For additional assistance, call Technical Support at (800) 328-4447.

Contact Technical Support before replacing the unit or components and for additional troubleshooting.

Table 23-1: Codes

Error Code	Failure Mode
E1	Internal %RH/Temperature Sensor Failure
E3	Model D77 Remote Control Communication Loss
E4	Insufficient Capacity
E5	High Temperature Thermistor Failure
E6	Low Temperature Thermistor Failure
E7	Float Switch Open
E8	Inlet Air Temperature Out of Range
E9	Fan or Compressor Fault

Troubleshooting

For assistance, call Technical Support at (800) 328-4447. Use the guides on the following pages to identify and correct system faults. Contact Technical Support before replacing the unit or any components and for additional troubleshooting.

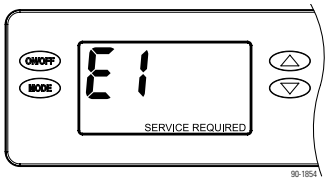

DIAGNOSTIC CODES

When an error occurs, the Diagnostic Code along with SERVICE REQUIRED will be displayed on the control screen. If an Alert Light (part # 601176) is used, the light will turn on when an error occurs.

Table 24-1:
Diagnostic Codes

Diagnostic Code	Failure Mode	Action	Reset
E1	Internal Humidity or Temperature Sensor Open or Shorted	If connection okay, replace User Interface.	Cycle Power
E3	Model D77 Remote Control Communication Loss	• Check connections between Model D77 and dehumidifier control board. Terminals should be fully inserted and secured in the control board and Model D77 control terminals. • If connections are correct and secure, turn off the dehumidifier and remove the Model D77. Use a short section of 4-wire cable to reconnect the Model D77 to the control board. Turn the dehumidifier back on and decrease the humidity setting below ambient conditions on the Model D77. If the dehumidifier turns on, the problem is with the wiring between the dehumidifier and control. • If the dehumidifier does not turn on, call Technical Support.	Self-Correcting
E4	Insufficient Capacity	• Check the frost sensor connection at the power board. Terminal should be fully seated on the power board pins. • Remove the side access panel and verify that the sensor is secured to the suction line. • If the sensor is connected and secured to the refrigeration line proceed to the next step. • Reset the fault by cycling power to the dehumidifier. • Turn the humidity setting down (below room/home humidity level) to make a dehumidification call. • Allow the fan and compressor to run for approximately 10-15 minutes and then enter diagnostic test mode by simultaneously pressing the UP ARROW and MODE buttons for 3 seconds. The LCD will display the temperature measured by the internal sensor while also displaying AIR SAMPLING and ON, the humidity measured by the internal sensor while also displaying %RH and ON, and the frost sensor temperature while also displaying ON. Scroll through these values by using the UP/DOWN arrow buttons. • Record values and call Technical Support.	Cycle Power

Troubleshooting

Table 25-1:
Diagnostic Codes (continued)

Diagnostic Code	Failure Mode	Action	Reset
E5	High Temperature Thermistor Failure	• Check the high temperature sensor connection at the power board. Terminal should be fully seated on the power board pins. • Remove the side access panel and verify the sensor is not damaged and connected to the refrigeration line coming from the compressor. • If the sensor is connected and secured to the refrigeration line, it may need to be replaced. Contact Technical Support to confirm.	Cycle Power
E6	Low Temperature Thermistor Failure	• Check the low temperature sensor connection at the power board. • Remove the side access panel and verify the sensor is not damaged and connected to the suction line. • Terminal should be fully seated on the power board pins. • If the sensor is connected and secured to the refrigeration line, it may need to be replaced. Contact Technical Support to confirm.	Self-Correcting
E7	Float Switch Open	• Empty the condensate pan. • Check the float switch connection at the control board. • If not using a float switch, verify jumper is between float switch terminals on dehumidifier control board. • If the problem persists, replace the float switch.	Self-Correcting
E8	Inlet Air Temperature Out of 50°F – 104°F (10°C - 40°C) Range or Dew Point Below 36°F (2.2°C)	• Verify all ductwork is properly sealed. • If no signs of leak points, contact Technical Support.	Self-Correcting
E9	Fan or Compressor Fault	Cycle power. If problem persists, contact Technical Support.	Cycle Power

Troubleshooting

Table 26-1:
Troubleshooting

Symptom	Possible Reason	Troubleshooting Procedure
Dehumidifier does not turn on/run.	No power to unit.	• Check that the dehumidifier is plugged in. • Check that the power switch is turned ON. • Check that the control is turned ON. • Check that the circuit breaker has not tripped.
Dehumidifier blower is running but with little or no airflow.	Pressure drop across dehumidifier is too high.	• Check dehumidifier air filter and replace if necessary. • Check for blocked duct work and clear.
Dehumidifier blower is running but compressor is not.	Float switch open.	• If float switch installed, check connections at control board and empty condensate pan. • If no float switch installed check that the jumper is installed at the float switch terminals on the control board.
	Coil frosting – defrost.	• Lack of or reduced airflow. Check dehumidifier air filter and replace if necessary. • Check for blocked duct work. • Inlet air conditions below 60°F (15.6°C). Increase the humidity setting.
	Inlet air temperature is outside of the 50°F – 104°F (10°C - 40°C) range or the dew point is below 36°F (2.2°C) and there is a demand for dehumidification.	• Verify all ductwork is properly sealed.
Dehumidifier is not draining properly.	Drain line blocked or unit not level.	• Verify that the unit is level. • Check the drain line blockages and for a continuous downward slope.
Dehumidifier is producing hot air.	Normal function.	• Air is reheated across the condenser coil, resulting in a temperature rise between inlet and outlet, this is normal.

RL Series

FIGURE 27-1: CDS DEHUMIDIFIER REPLACEMENT PARTS

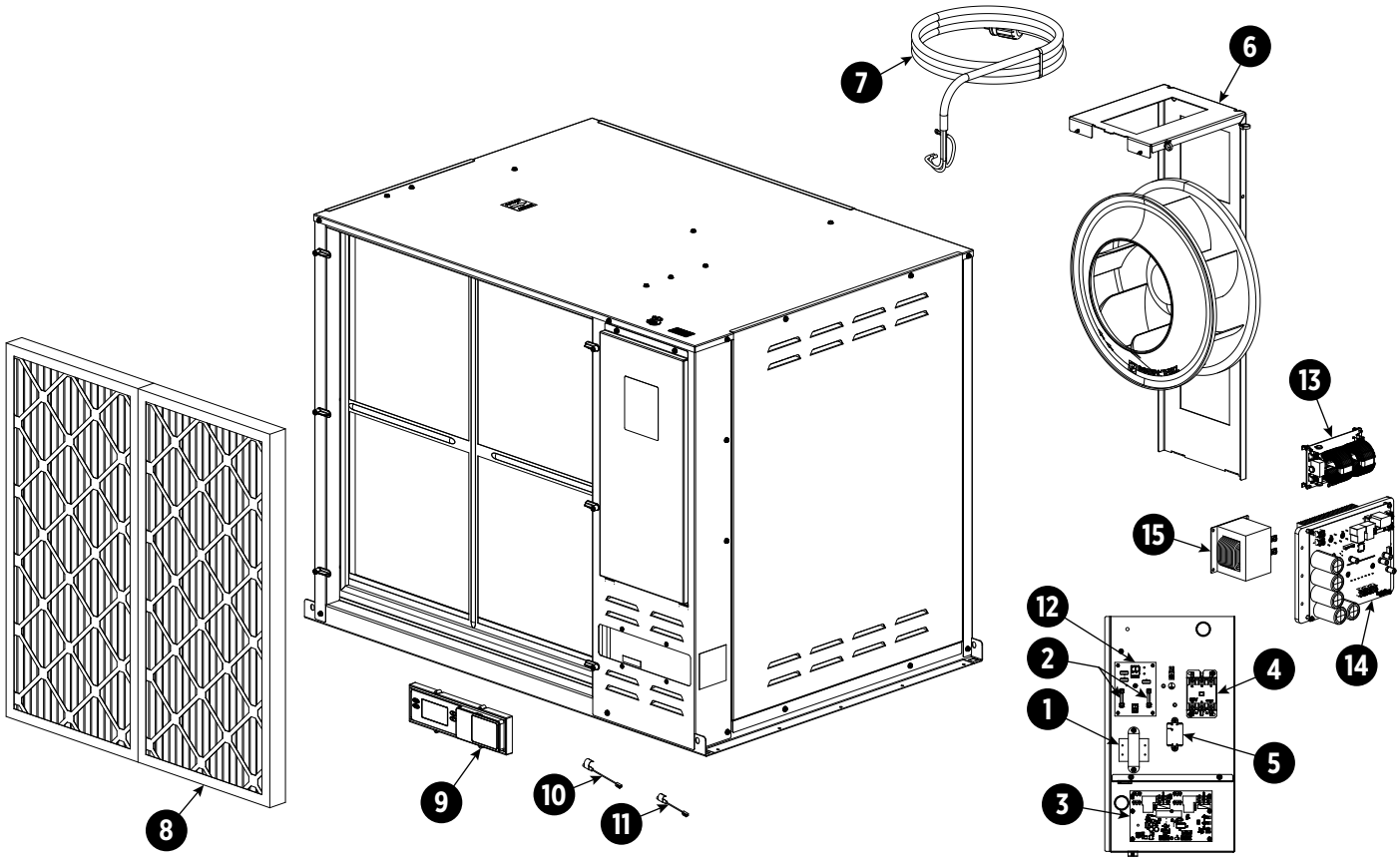

90-2536

RL Series

Table 28-1:
Replacement Parts

Part number	Part Description	Part No.
1	Transformer, 40VA, 208-240V	601156-001
	Transformer, 40VA, 277V	601156-002
2	Fuse, Class 3AB, 0.4A, 70C, 440V, Slow-Blow	601157
3	Internal Power PCB	601158
4	Compressor Contactor	601159
5	Fan Relay	601160
6	Fan Assembly	601161
7	Cord, SJT 10/3, L6-30P, 208-240V	601162-001
	Cord, SJT 10/3, L7-30P, 277V	601162-002
8	Filter, MERV 11	601163
9	User Interface	601164
10	Low Temperature Sensor	601165
11	High Temperature Sensor	601166
12	MOV Board 240V, 208-240V	601167-001
	MOV Board, 277V	601167-002
13	EMI Filter Board, 208-240V	601168-001
	EMI Filter Board, 277V	601168-002
14	Compressor Drive Board, 208-240V	601169-001
	Compressor Drive Board, ,277V	601169-002
15	Choke-Compressor Drive	601170
Not Shown		
D77, Digital Dehumidifier Control		601171
P-Trap Kit		601172
Fitting, 3/4" MNPT x 3/4" BARB, PVC		601173
Drain Tubing, 3/4" ID x 10' L		601174
Leveling Feet		601175
Alert Light		601176
Duct Kit		601177

Notes

Notes

Notes

Expect quality from the industry leader

For more than 45 years, DriSteem has been leading the industry with creative and reliable humidification solutions. Our focus on quality is evident in the construction of the RTS humidifier, which features cleanable, stainless steel construction. DriSteem also leads the industry with a Two-year Limited Warranty and optional extended warranty.

For more information
www.dristeem.com
sales@dristeem.com

For the most recent product information visit our Web site: www.dristeem.com

DRI-STEEM Corporation
a subsidiary of Research Products Corporation
DriSteem U.S. operations are ISO 9001:2015 certified

U.S. Headquarters:
14949 Technology Drive
Eden Prairie, MN 55344
800-328-4447 or 952-949-2415
952-229-3200 (fax)

Continuous product improvement is a policy of DriSteem Corporation; therefore, product features and specifications are subject to change without notice.

Two-year Limited Warranty

DriSteem Corporation ("DriSteem") warrants to the original user that its products will be free from defects in materials and workmanship for a period of two (2) years after installation or twenty-seven (27) months from the date DriSteem ships such product, whichever date is the earlier.

If any DriSteem product is found to be defective in material or workmanship during the applicable warranty period, DriSteem's entire liability, and the purchaser's sole and exclusive remedy, shall be the repair or replacement of the defective product, or the refund of the purchase price, at DriSteem's election. DriSteem shall not be liable for any costs or expenses, whether direct or indirect, associated with the installation, removal or reinstallation of any defective product. The Limited Warranty does not include cylinder replacement for electrode steam humidifiers.

DriSteem's Limited Warranty shall not be effective or actionable unless there is compliance with all installation and operating instructions furnished by DriSteem, or if the products have been modified or altered without the written consent of DriSteem, or if such products have been subject to accident, misuse, mishandling, tampering, negligence or improper maintenance. Any warranty claim must be submitted to DriSteem in writing within the stated warranty period. Defective parts may be required to be returned to DriSteem.

DriSteem's Limited Warranty is made in lieu of, and DriSteem disclaims all other warranties, whether express or implied, including but not limited to any IMPLIED WARRANTY OF MERCHANTABILITY, ANY IMPLIED WARRANTY OF FITNESS FOR A PARTICULAR PURPOSE, any implied warranty arising out of a course of dealing or of performance, custom or usage of trade.

DRI-STEEM SHALL NOT, UNDER ANY CIRCUMSTANCES BE LIABLE FOR ANY DIRECT, INDIRECT, INCIDENTAL, SPECIAL OR CONSEQUENTIAL DAMAGES (INCLUDING, BUT NOT LIMITED TO, LOSS OF PROFITS, REVENUE OR BUSINESS) OR DAMAGE OR INJURY TO PERSONS OR PROPERTY IN ANY WAY RELATED TO THE MANUFACTURE OR THE USE OF ITS PRODUCTS. The exclusion applies regardless of whether such damages are sought based on breach of warranty, breach of contract, negligence, strict liability in tort, or any other legal theory, even if DriSteem has notice of the possibility of such damages.

By purchasing DriSteem's products, the purchaser agrees to the terms and conditions of this Limited Warranty.

Extended warranty

The original user may extend the term of the DriSteem Limited Warranty for a limited number of months past the initial applicable warranty period and term provided in the first paragraph of this Limited Warranty. All the terms and conditions of the Limited Warranty during the initial applicable warranty period and term shall apply during any extended term. An extended warranty term of an additional twelve (12) months or twenty four (24) months of coverage may be purchased. The extended warranty term may be purchased until eighteen (18) months after the product is shipped, after which time no extended warranties are available.

Any extension of the Limited Warranty under this program must be in writing, signed by DriSteem, and paid for in full by the purchaser.

Form No. CDS-IOM-EN-REVA-2023-0123
Part No. 890000–810 Rev A
10016696