FIGURE 1-1: GENERAL DRISTEEM HIGH-PRESSURE SYSTEM DISPERSION OVERVIEW

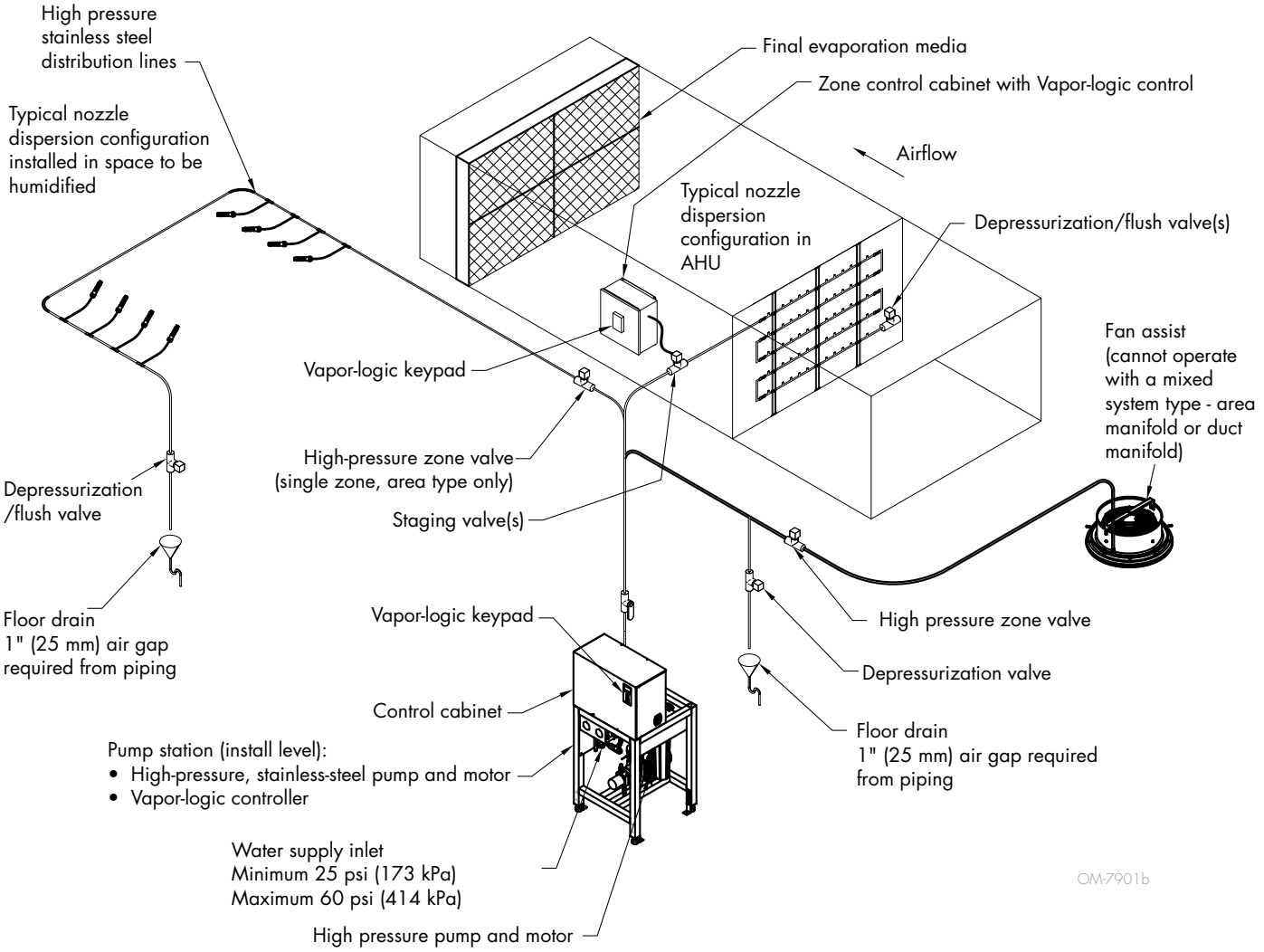

Notes:

- System components and configuration may vary to meet application requirements.
- A water treatment system must be used with the DriSteem High-pressure system. See the Pre-treatment Installation, Operation, and Maintenance manual for skid mounted options.
- All units must be wired in strict accordance with the wiring diagrams and piping furnished with this unit.
- If the developed piping length is greater than 500' (152 m), consult factory for proper sizing and layout for area type or fan assist.
- Maximum 16 zones per pump station.

Continuous product improvement is a policy of DriSteem; therefore, product features and specifications are subject to change without notice.

FIGURE 2-1: HIGH-PRESSURE DISPERSION SYSTEM (10-24 WELDED SADDLE)

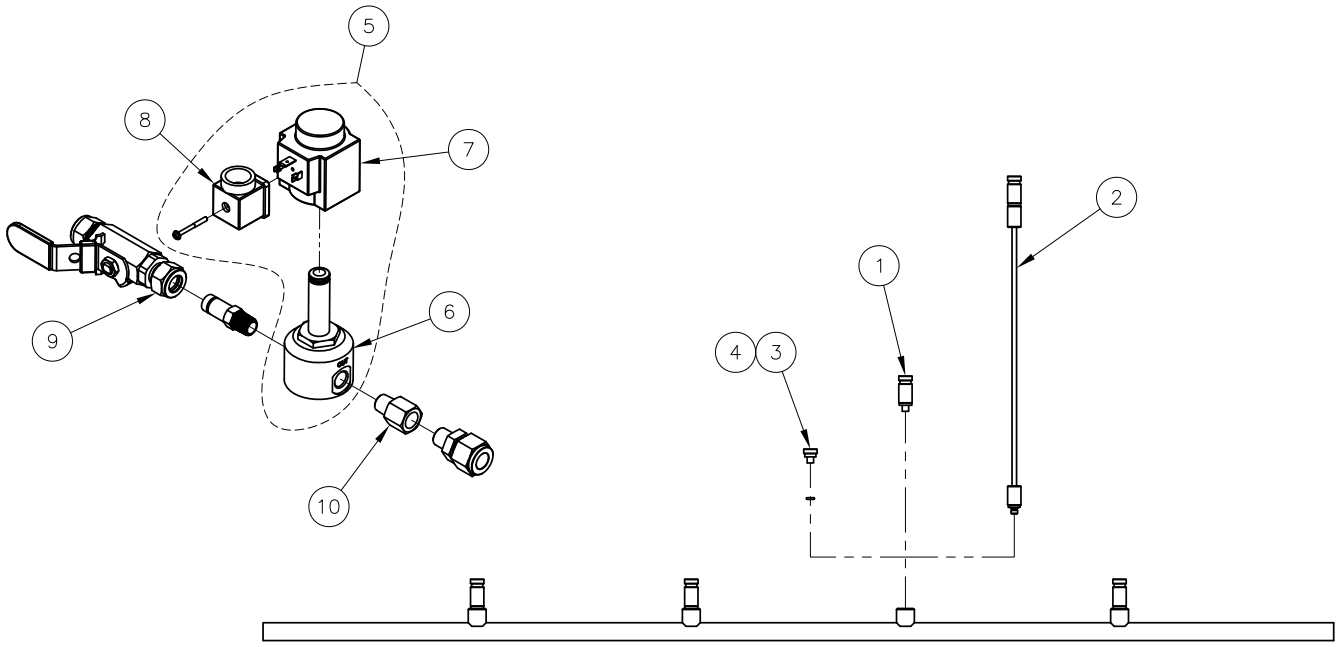

OM-8061

Table 2-1: High-pressure system	
No.	Description
1	Nozzle assembly 6 lb/hr 0.15 mm hole
	Nozzle assembly 10 lb/hr 0.20 mm hole
	Nozzle assembly 15 lb/hr 0.30 mm hole
2	Nozzle extension assembly 6 pph service kit
	Nozzle extension assembly 10 pph service kit
	Nozzle extension assembly 15 pph service kit
3	Plug manifold 10-24 mnpt nozzle tip
4	O-ring 3.5 mm ID x 5.9 mm OD 70D Buna-N
5	Valve assembly solenoid ¼" staging HPAS
6	Valve ¼" solenoid high pressure
7	Valve coil solenoid
8	Valve coil cap conduit
9	Valve ball 316SST H-700 ½" CMP
10	½" Hydraulic hose, 18" L (Not Shown)
11	Accumulator, ½" connection, 635 psi setpoint (Not Shown)

- High-pressure water flows past a micro-turbine, breaking water into fine particles.
- Micro-turbines in nozzles fragment water droplets into ultra-fine particles (90% are ten microns or less)
- Integral check-valve eliminates dripping when nozzle shuts off.

Continuous product improvement is a policy of DriSteem; therefore, product features and specifications are subject to change without notice.

FIGURE 3-1: DRISTEEM HIGH-PRESSURE SYSTEM DIMENSIONS

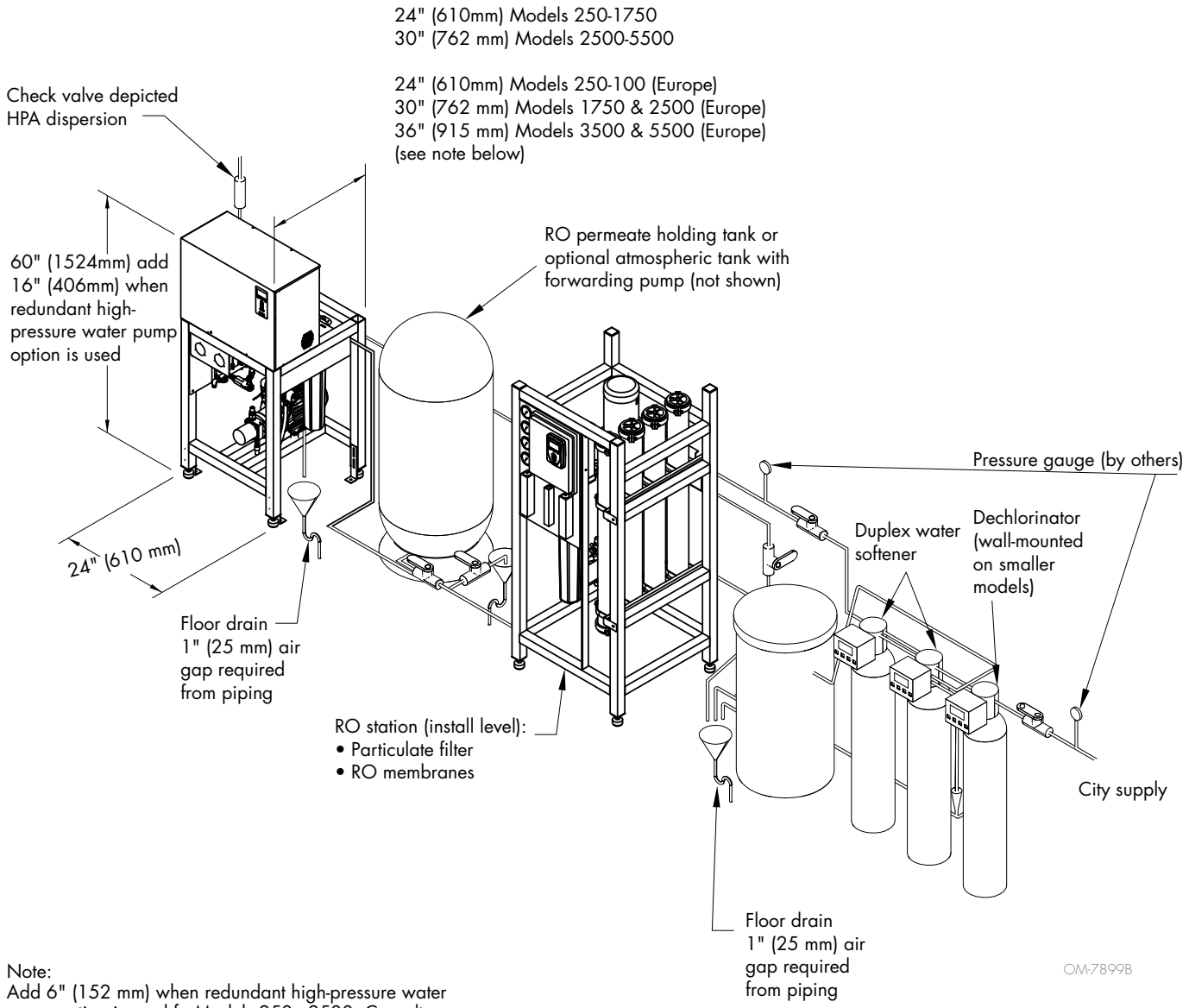

Note:
Add 6" (152 mm) when redundant high-pressure water pump option is used fo Models 250 - 2500. Consult factory for Models 3500 and 5500 (for 50 Hz design).

Continuous product improvement is a policy of DriSteem; therefore, product features and specifications are subject to change without notice.

Table 4-1:
High pressure specifications

Equipment component	Minimum obstruction-free clearance allowance inches (mm)						Maximum distance from drain (if applicable) inches (mm)
	Front face (upstream)	Back face (downstream)	Left side	Right side	Top	Bottom	
Softener(s)	15 (381)	—	—	—	15 (381)	—	—
Dechlorinator	15 (381)	—	—	—	15 (381)	—	—
Brine tank	15 (381)	—	24 (610)	24 (610)	15 (381)	—	—
Softener/ dechlor/brine skid (only applies to skidded water treatment systems)	20 (508)	—	—	—	15 (381)	—	—
RO generation station	36 (915)	—	—	—	48 (1219)	—	—
RO storage tank	18 (457) from front of plumbing	—	—	—	—	—	—
Pump station	36 (915)	8 (203)	36 (915)	8 (203)	12 (305)	—	240 (6096)
AHU dispersion manifold/nozzles	12 (305)*	Minimum: 24 (610) Maximum: 96 (2438) Recommended: 48 (1219)	—	—	6 (152)	6 (152)	—
Sensors	24 (610)	—	—	—	—	—	—
Solenoid valves	24 (610)	—	—	—	—	—	—
Final evaporation media	24 (610)	12 (305)	—	—	—	—	—

* 24 (610) if airspeed is below 400 fpm.
Note: Wet section of duct/AHU needs to encompass upstream clearance of dispersion to downstream clearance of final evaporation media panel.

FIGURE 4-1: MINIMUM RECOMMENDED CLEARANCES

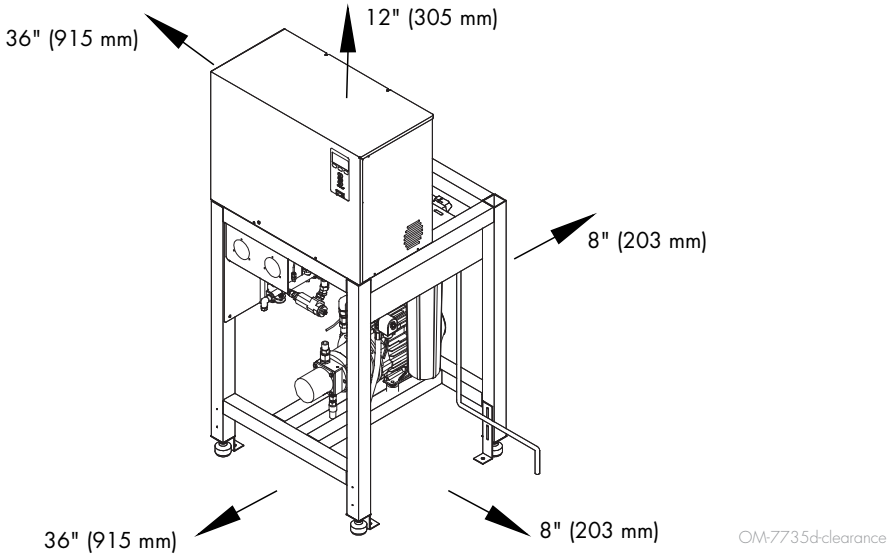

Continuous product improvement is a policy of DriSteem; therefore, product features and specifications are subject to change without notice.

Table 5-1:
Adiatec high-pressure pump station specifications

Model	250	500	1000	1750	2500	3500	5500
System capacity, lbs/hr (kg/h)	250 (113)	500 (227)	1000 (454)	1750 (794)	2500 (1134)	3500 (1588)	5500 (2495)
System voltage/phase, Amp draw	240/1, 5.2 480/3, 1.6 600/3, 1.3	240/1, 7.3 480/3, 2.2 600/3, 1.8	240/1, 13.8 480/3, 4.0 600/3, 3.2	480/3, 6.6 600/3, 5.3	480/3, 6.6 600/3, 5.3	480/3, 9.2 600/3, 7.3	480/3, 12.6 600/3, 10.1
Fuse size *(see Note 1)*	240/1, 25 480/3, 16 600/3, 6	240/1, 35 480/3, 10 600/3, 6	240/1, 50 480/3, 15 600/3, 10	480/3, 30 600/3, 15	480/3, 30 600/3, 15	480/3, 35 600/3, 20	480/3, 40 600/3, 20
Dimensions (W/D/H), inches (mm)	24/24/60 (610/610/1524)	24/24/60 (610/610/1524)	24/24/60 (610/610/1524)	24/24/60 (610/610/1524)	24/30/60 (610/762/1524)	24/30/60 (610/762/1524)	24/30/60 (610/762/1524)
Dimensions (W/D/H) with redundant high-pressure pump option, inches (mm)	24/30/76 (610/762/1930)	24/30/76 (610/762/1930)	24/30/76 (610/762/1930)	24/30/76 (610/762/1930)	24/30/76 (610/762/1930)	24/30/76 (610/762/1930)	24/30/76 (610/762/1930)
Operating weight, lbs (kg)	275 (125)	300 (136)	325 (147)	325 (147)	350 (159)	400 (181)	450 (204)
Operating weight with redundant high-pressure pump option, lbs (kg)	375 (170)	400 (181)	475 (216)	475 (216)	500 (227)	625 (284)	700 (318)
Shipping weight, lbs (kg)	296 (134)	323 (146)	349 (158)	349 (158)	376 (171)	430 (195)	484 (219)
Shipping weight with redundant high-pressure pump option, lbs (kg)	403 (183)	430(195)	511 (232)	511 (232)	538 (244)	672 (305)	753 (341)
Supply water connection diameter, inches *(see Note 2)*	1/2	1/2	1/2	1/2	3/4	3/4	3/4
High-pressure water connection diameter, inches *(see Note 2)*	1/2	1/2	1/2	1/2	1/2	1/2	1/2
5-micron prefilter diameter x height, inches (mm)	2.5 x 40 (64 x 1016)	2.5 x 40 (64 x 1016)	2.5 x 40 (64 x 1016)	2.5 x 40 (64 x 1016)	2.5 x 40 (64 x 1016)	2.5 x 40 (64 x 1016)	2.5 x 40 (64 x 1016)
High-pressure pump flow rate, gpm (L/m)	0.5 (1.89)	1.0 (3.78)	2.0 (7.57)	3.5 (13.2)	5 (18.9)	7 (26.5)	11 (41.6)
High-pressure pump motor power, hp (kW)	1 (0.75)	1.5 (1.1)	3 (2.2)	5 (3.7)	5 (3.7)	7.5 (5.5)	10 (7.5)
High-pressure pump motor rpm	1000–1500	1000–2550	1000–2250	1000–2550	1000–2250	1000–2550	700–2450

Notes:
1. Wiring and branch circuit protection (Type RK1, J, or T fusing) to be provided by installer in accordance with NEC requirements.
2. High-pressure compression fittings.
3. Unit ships with 36" x 1/2" high-pressure flexible hose and a 1/2" union for easy connection to dispersion piping.
4. 25 psi (170 kPa) supply water pressure at 125% of maximum flow rate, 60 psi (415 kPa) maximum
5. The standard enclosure on the RO-400 series is NEMA 1.

Continuous product improvement is a policy of DriSteem; therefore, product features and specifications are subject to change without notice.

Table 6-1:
Adiatec high-pressure pump station specifications (50Hz)

Model	250	500	1000	1750	2500	3500	5500
System capacity, lbs/hr (kg/h)	250 (113)	500 (227)	1000 (454)	1750 (794)	2500 (1134)	3500 (1588)	5500 (2495)
System voltage/phase, Amp draw	230/1, 5.2 400/3, 1.9	230/1, 9.2 400/3, 3.3	230/1, 16.9 400/3, 6	400/3, 8.1	400/3, 10.6	400/3, 14.7	400/3, 20.6
Fuse size *(see Note 1)*	230/1, 25 400/3, 15	230/1, 35 400/3, 15	230/1, 50 400/3, 20	400/3, 30	400/3, 35	400/3, 40	400/3, 50
Dimensions (W/D/H), inches (mm)	24/24/60 (610/610/1524)	24/24/60 (610/610/1524)	24/24/60 (610/610/1524)	24/30/60 (610/762/1524)	24/30/60 (610/762/1524)	24/36/60 (610/915/1524)	24/36/60 (610/915/1524)
Dimensions (W/D/H) with redundant high-pressure pump option, inches (mm)	24/30/76 (610/762/1930)	24/30/76 (610/762/1930)	24/30/76 (610/762/1930)	24/30/76 (610/762/1930)	24/30/76 (610/762/1930)	Consult factory	Consult factory
Operating weight, lbs (kg)	275 (125)	325 (147)	350 (159)	375 (170)	400 (181)	450 (204)	525 (238)
Operating weight with redundant high-pressure pump option, lbs (kg)	375 (170)	425 (193)	480 (218)	510 (231)	575 (261)	Consult factory	Consult factory
Shipping weight, lbs (kg)	295 (133)	349 (158)	376 (170)	403 (182)	430 (195)	485 (220)	564 (255)
Shipping weight with redundant high-pressure pump option, lbs (kg)	403 (182)	456 (206)	516 (234)	548 (248)	618 (280)	Consult factory	Consult factory
Supply water connection diameter, inches with metric adapter *(see Note 2)*	1/2 (12 mm)	1/2 (12 mm)	1/2 (12 mm)	1/2 (12 mm)	3/4 (18 mm)	3/4 (18 mm)	3/4 (18 mm)
High-pressure water connection diameter, inches with metric adapter *(see Note 2)*	1/2 (12 mm)	1/2 (12 mm)	1/2 (12 mm)	1/2 (12 mm)	1/2 (12 mm)	1/2 (12 mm)	1/2 (12 mm)
5-micron prefilter diameter x height, inches (mm)	2.5 x 40 (64 x 1016)	2.5 x 40 (64 x 1016)	2.5 x 40 (64 x 1016)	2.5 x 40 (64 x 1016)	2.5 x 40 (64 x 1016)	2.5 x 40 (64 x 1016)	2.5 x 40 (64 x 1016)
High-pressure pump flow rate, gpm (L/m)	0.5 (1.89)	1.0 (3.78)	2.0 (7.57)	3.5 (13.2)	5 (18.9)	7 (26.5)	11 (41.6)
High-pressure pump motor power, hp (kW)	1 (0.75)	2 (1.5)	4 (3)	5.5 (4)	7.5 (5.5)	10 (7.5)	15 (11)
High-pressure pump motor rpm	1000–1500	1000–2550	1000–2250	1000–2550	1000–2250	1000–2550	700–2450

Notes:
1. Wiring and branch circuit protection (Type RK1, J, or T fusing) to be provided by installer in accordance with NEC requirements.
2. High-pressure compression fittings. Metric adapter attached to system (optional).
3. Unit ships with 36" x 1/2" high-pressure flexible hose and a 1/2" union for easy connection to dispersion piping.
4. 25 psi (170 kPa) supply water pressure at 125% of maximum flow rate, 60 psi (415 kPa) maximum
5. The standard enclosure on the RO-400 series is NEMA 1.

Continuous product improvement is a policy of DriSteem; therefore, product features and specifications are subject to change without notice. Updated 09-27-23

FIGURE 7-1: PIPING AND INSTRUMENTATION ARRANGEMENT, MODELS 250 AND 500

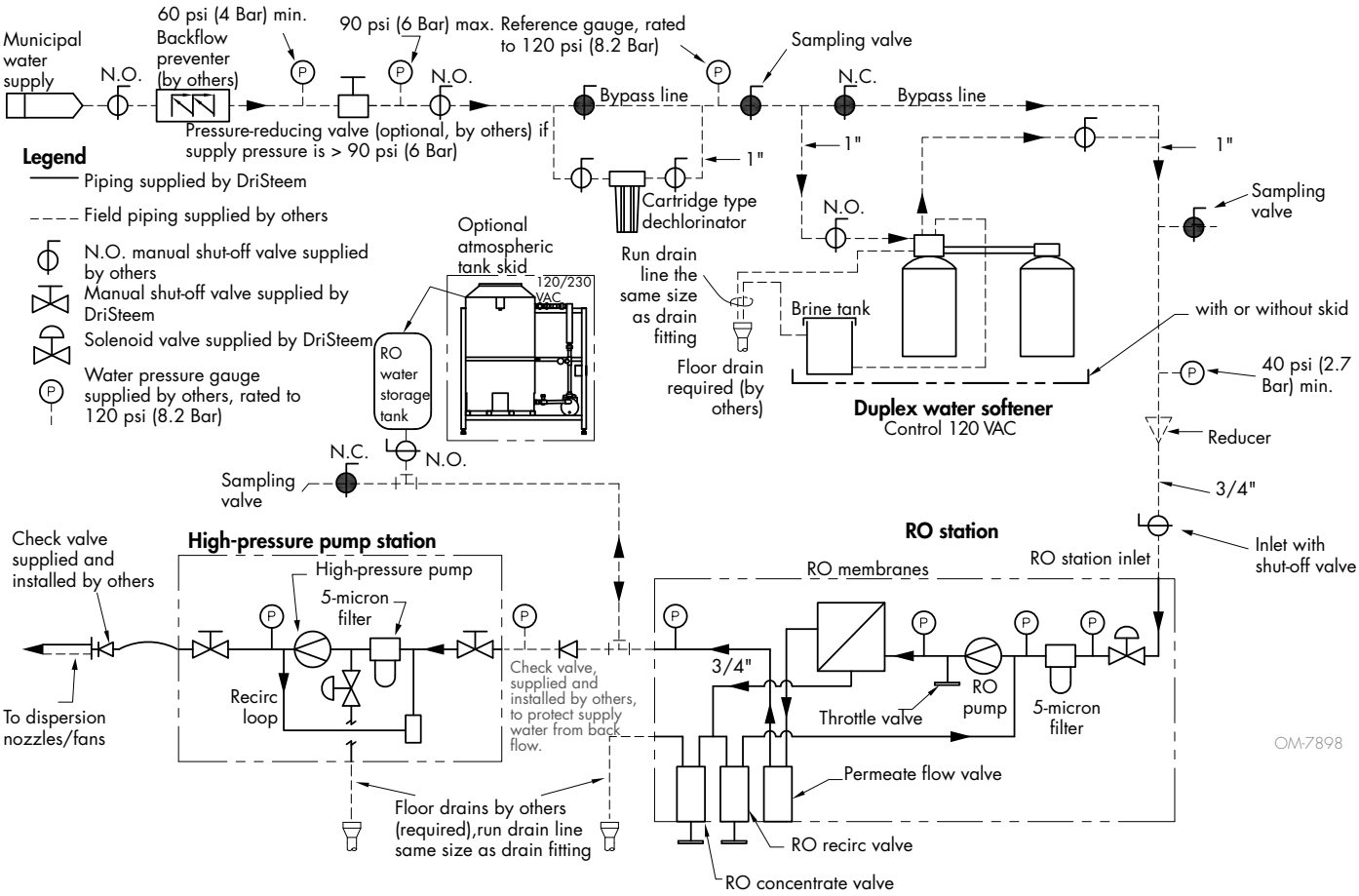

Note:
Wiring and branch circuit protection (Type RK1, J, or T fusing) to be provided by installer in accordance with International Electrical Code.

Continuous product improvement is a policy of DriSteem; therefore, product features and specifications are subject to change without notice. Updated 09-27-23

FIGURE 8-1: PIPING AND INSTRUMENTATION ARRANGEMENT, MODELS 250 THROUGH 5500

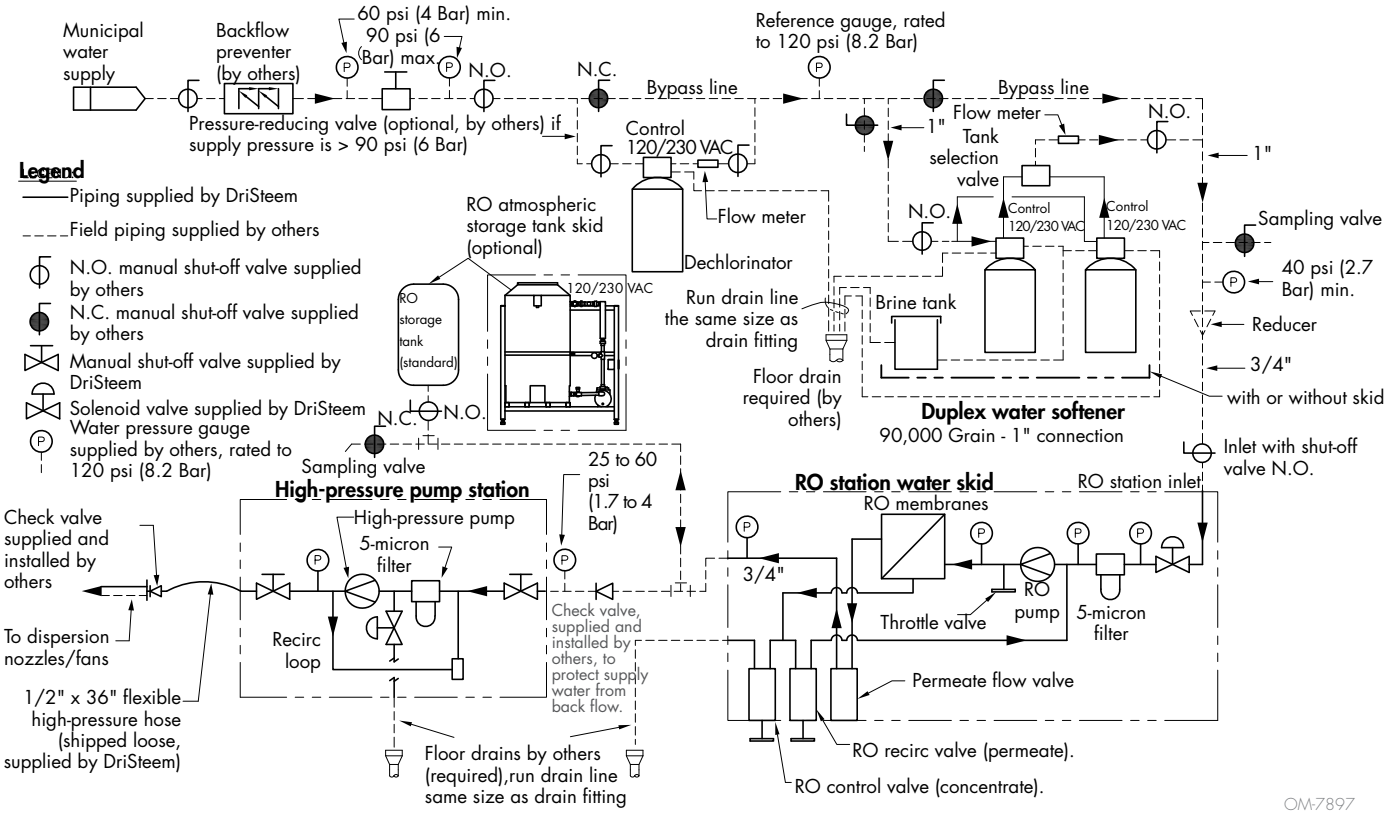

Note: Wiring and branch circuit protection (Type RK1, J, or T fusing) to be provided by installer in accordance with International Electrical Code.

Continuous product improvement is a policy of DriSteem; therefore, product features and specifications are subject to change without notice.

Table 9-1:
Maximum length of interconnecting tubing between pump station and RO holding tank

RO station model	Volume		Tubing nominal diameter	Minimum tube I.D.		Maximum developed length*	
	gpm	L/m		in.	mm	ft	m
401	0.55	2.1	1/2" (12 mm)	0.375	10	>100	>30
			3/4" (18 mm)	0.625	16	>100	>30
			1" (25 mm)	0.875	23	>100	>30
402	1.10	4.2	1/2" (12 mm)	0.375	10	64	>20
			3/4" (18 mm)	0.625	16	>100	>30
			1" (25 mm)	0.875	23	>100	>30
403	2.20	8.3	1/2" (12 mm)	0.375	10	18	5.5
			3/4" (18 mm)	0.625	16	>100	>30
			1" (25 mm)	0.875	23	>100	>30
404	3.85	14.6	1/2" (12 mm)	0.375	10	—	—
			3/4" (18 mm)	0.625	16	>100	>30
			1" (25 mm)	0.875	23	>100	>30
406	5.50	20.8	1/2" (12 mm)	0.375	10	—	—
			3/4" (18 mm)	0.625	16	95	29
			1" (25 mm)	0.875	23	>100	>30
408	7.70	29.1	1/2" (12 mm)	0.375	10	—	—
			3/4" (18 mm)	0.625	16	51	16
			1" (25 mm)	0.875	23	>100	>30
412	12.1	45.8	1/2" (12 mm)	0.375	10	—	—
			3/4" (18 mm)	0.625	16	22	7
			1" (25 mm)	0.875	23	89	27

* Calculations are based on pipe finish factor of 130 and low-pressure piping length of 1' (0.3 m).
** Installation must meet the minimum and maximum inlet pressures for all components, as stated in the specification tables in the "Installation" section of this manual.

Continuous product improvement is a policy of DriSteem; therefore, product features and specifications are subject to change without notice. Updated 09-27-23

Pressure drop in interconnecting tubing between pump station and dispersion

High-pressure system pressure loss: 0.125" Nylon

Table 10-1:
High-pressure loss (0.125" Nylon)

Developed length of tubing	Maximum humidification load (lbs/hr)							
	5	10	15	20	25	30	35	40
20	1	4	9	16	24	34	45*	58*
40	2	9	19	32	49	68	90	116
60	4	13	28	48	73	102	136	174
80	5	18	38	64	97	136	181	232
100	6	22	47	80	121	170	226	290
125	8	28	59	100	152	212	283	362
150	9	33	71	120	182	255	339	434
200	12	44	94	160	243	340	452	579
250	15	56	118	201	303	425	565	724
300	18	67	141	241	364	510	678	869
400	25	89	188	321	485	680	905	1158
500	31	111	235	401	606	850	1131	1448
750	46	167	353	602	910	1275	1696	2172
1000	62	222	471	802	1213	1700	2262	2896
2000	123	444	942	1604	2426	3400	4523	5792
3000	185	667	1413	2407	3638	5100	6785	8688
4000	246	889	1884	3209	4851	6800	9046	11584
5000	308	1111	2354	4011	6064	8499	11308	14480

NOTES:
Developed length includes piping and fitting.
Shaded cells are strongly not recommended, due to excessive pressure drop.
* Cells signify pipe velocities over 7 ft/sec and are not recommended.

Continuous product improvement is a policy of DriSteem; therefore, product features and specifications are subject to change without notice.

Pressure drop in interconnecting tubing between pump station and dispersion

High-pressure system pressure loss: 0.25" Nylon

Table 11-1:
High-pressure loss (0.25" Nylon)

Developed length of tubing	Maximum humidification load (lbs/hr)												
	10	20	30	40	50	60	70	80	90	100	150	200	250
20	0	0	0	0	0	1	1	1	1	2	3	6	9
40	0	0	0	1	1	1	2	2	3	3	7	11	17
60	0	0	1	1	1	2	2	3	4	5	10	17	26
80	0	0	1	1	2	2	3	4	5	6	13	23	34
100	0	0	1	1	2	3	4	5	6	8	17	28	43
125	0	1	1	2	3	4	5	7	8	10	21	36	54
150	0	1	1	2	3	5	6	8	10	12	25	43	65
200	0	1	2	3	4	6	8	10	13	16	33	57	86
250	0	1	2	4	5	8	10	13	16	20	42	71	108
300	0	1	3	4	7	9	12	16	19	24	50	85	129
400	0	2	3	6	9	12	16	21	26	32	67	114	172
500	1	2	4	7	11	15	20	26	32	39	84	142	215
750	1	3	6	11	16	23	31	39	49	59	125	214	323
1000	1	4	8	14	22	31	41	52	65	79	167	285	431
2000	2	8	17	29	44	61	82	104	130	158	334	570	861
3000	3	12	25	43	66	92	122	157	195	237	502	855	1292
4000	4	16	34	58	87	123	163	209	260	316	669	1140	1723
5000	6	20	42	72	109	153	204	261	325	395	836	1424	2153

NOTES:
Developed length includes piping and fitting.
Shaded cells are strongly not recommended, due to excessive pressure drop.
* Cells signify pipe velocities over 7 ft/sec and are not recommended.

Continuous product improvement is a policy of DriSteem; therefore, product features and specifications are subject to change without notice.

Pressure drop in interconnecting tubing between pump station and dispersion

High-pressure system pressure loss: 0.375" Nylon

Table 12-1:
High-pressure loss (0.375" Nylon)

Developed length of tubing	Maximum humidification load (lbs/hr)													
	50	100	150	200	250	300	350	400	450	500	750	1000	1250	1500
20	0	0	0	1	1	2	2	3	4	4	9	16	24	33
40	0	0	1	2	2	3	4	6	7	9	18*	31*	47*	66*
60	0	1	1	2	4	5	7	9	11	13	27*	47*	71*	99
80	0	1	2	3	5	7	9	11	14	17	37*	62*	94	132
100	0	1	2	4	6	8	11	14	18	22	46*	78*	118	165
125	0	1	3	5	7	10	14	18	22	27	57*	97	147	206
150	0	2	3	6	9	13	17	21	27	32	69*	117	177	248
200	1	2	5	8	12	17	22	29	36	43	91	156	236	330
250	1	3	6	10	15	21	28	36	44	54	114	195	294	413
300	1	3	7	12	18	25	33	43	53	65	137	234	353	495
400	1	4	9	16	24	34	45	57	71	86	183	312	471	660
500	2	5	12	20	30	42	56	71	89	108	229	389	589	825
750	2	8	17	30	45	63	84	107	133	162	343	584	883	1238
1000	3	11	23	40	60	84	111	143	178	216	457	779	1178	1651
2000	6	22	46	79	120	168	223	285	355	432	914	1558	2355	3301
3000	9	33	70	119	179	251	334	428	533	647	1372	2337	3533	4952
4000	12	44	93	158	239	335	446	571	710	863	1829	3116	4711	6603
5000	15	55	116	198	299	419	557	714	888	1079	2286	3895	5888	8253

NOTES:
Developed length includes piping and fitting.
Shaded cells are strongly not recommended, due to excessive pressure drop.
* Cells signify pipe velocities over 7 ft/sec and are not recommended.

Continuous product improvement is a policy of DriSteem; therefore, product features and specifications are subject to change without notice.

Pressure drop in interconnecting tubing between pump station and dispersion

High-pressure system pressure loss: 0.5" (12 mm) Stainless Steel

Table 13-1:
High-pressure loss (0.5" [12 mm] Stainless Steel)

Developed length of tubing	Maximum humidification load (lbs/hr)													
	250	500	1000	1500	2000	2500	3000	3500	4000	4500	5000	5500	6000	6500
20	0	1	3	6	10*	15*	20*	27*	35*	43*	53*	63*	74*	86*
40	0	1	5	11	19*	29*	41*	54*	70*	87*	105	126	148	171
60	1	2	8	17	29*	44*	61*	82*	105	130	158	189	222	257
80	1	3	11	23	39*	58*	82*	109	140	174	211	252	296	343
100	1	4	13	28	48*	73*	102	136	174	217	264	315	370	429
125	1	5	17	35	60*	91	128	170	218	271	330	393	462	536
150	2	6	20	43	72*	110	154	204	262	325	396	472	555	643
200	2	7	27	57	97	146	205	272	349	434	527	629	739	857
250	3	9	33	71	121	183	256	341	436	542	659	787	924	1072
300	3	11	40	85	145	219	307	409	523	651	791	944	1109	1286
400	4	15	54	113	193	292	410	545	698	868	1055	1259	1479	1715
500	5	19	67	142	242	365	512	681	872	1085	1319	1573	1848	2144
750	8	28	100	213	362	548	768	1022	1308	1627	1978	2360	2773	3216
1000	10	37	134	284	483	731	1024	1362	1745	2170	2637	3147	3697	4287
2000	21	74	268	567	967	1461	2048	2725	3489	4340	5275	6293	7393	8575
3000	31	111	402	851	1450	2192	3072	4087	5234	6509	7912	9440	11090	12862
4000	41	148	535	1135	1933	2922	4096	5449	6978	8679	10549	12586	14787	17150
5000	51	185	669	1418	2416	3653	5120	6812	8723	10849	13187	15733	18483	21437

NOTES:
Developed length includes piping and fitting.
Shaded cells are strongly not recommended, due to excessive pressure drop.
* Cells signify pipe velocities over 7 ft/sec and are not recommended.

Continuous product improvement is a policy of DriSteem; therefore, product features and specifications are subject to change without notice.

Pressure drop in interconnecting tubing between pump station and dispersion

High-pressure system pressure loss: 0.75" (18 mm) Stainless Steel

Table 14-1:
High-pressure loss (0.75" [18 mm] Stainless Steel)

Developed length of tubing	Maximum humidification load (lbs/hr)													
	250	500	1000	1500	2000	2500	3000	3500	4000	4500	5000	5500	6000	6500
20	0	0	0	1	1	2	3	4	5	6	7	9*	10*	12*
40	0	0	1	2	3	4	6	7	9	12	14	17*	20*	23*
60	0	0	1	2	4	6	8	11	14	18	21	26*	30*	35*
80	0	0	1	3	5	8	11	15	19	24	29	34*	40*	46*
100	0	1	2	4	7	10	14	18	24	29	36	43*	50*	58*
125	0	1	2	5	8	12	17	23	30	37	45	53*	63*	73*
150	0	1	3	6	10	15	21	28	35	44	54	64*	75*	87*
200	0	1	4	8	13	20	28	37	47	59	71	85*	100	116
250	0	1	5	10	16	25	35	46	59	73	89	107	125	145
300	0	2	5	12	20	30	42	55	71	88	107	128	150	174
400	1	2	7	15	26	40	55	74	95	118	143	170	200	232
500	1	3	9	19	33	49	69	92	118	147	179	213	250	290
750	1	4	14	29	49	74	104	138	177	220	268	320	376	436
1000	1	5	18	38	65	99	139	185	236	294	357	426	501	581
2000	3	10	36	77	131	198	277	369	473	588	714	852	1001	1161
3000	4	15	54	115	196	297	416	554	709	882	1072	1279	1502	1742
4000	6	20	73	154	262	396	555	738	945	1176	1429	1705	2003	2323
5000	7	25	91	192	327	495	694	923	1182	1470	1786	2131	2504	2904

NOTES:
Developed length includes piping and fitting.
Shaded cells are strongly not recommended, due to excessive pressure drop.
* Cells signify pipe velocities over 7 ft/sec and are not recommended.

Continuous product improvement is a policy of DriSteem; therefore, product features and specifications are subject to change without notice.

Pressure drop in interconnecting tubing between pump station and dispersion

High-pressure system pressure loss: 1.0" (25 mm) Stainless Steel

Table 15-1:
High-pressure loss (1.0" [25 mm] Stainless Steel)

Developed length of tubing	Maximum humidification load (lbs/hr)													
	250	500	1000	1500	2000	2500	3000	3500	4000	4500	5000	5500	6000	6500
20	0	0	0	0	0	0	1	1	1	1	2	2	2	3
40	0	0	0	0	1	1	1	2	2	3	4	4	5	6
60	0	0	0	1	1	1	2	3	3	4	5	6	7	9
80	0	0	0	1	1	2	3	4	5	6	7	8	10	11
100	0	0	0	1	2	2	3	5	6	7	9	10	12	14
125	0	0	1	1	2	3	4	6	7	9	11	13	15	18
150	0	0	1	1	2	4	5	7	9	11	13	16	18	21
200	0	0	1	2	3	5	7	9	12	14	18	21	25	29
250	0	0	1	2	4	6	9	11	15	18	22	26	31	36
300	0	0	1	3	5	7	10	14	17	22	26	31	37	43
400	0	0	2	4	6	10	14	18	23	29	35	42	49	57
500	0	1	2	5	8	12	17	23	29	36	44	52	62	71
750	0	1	3	7	12	18	26	34	44	54	66	79	92	107
1000	0	1	4	9	16	24	34	45	58	72	88	105	123	143
2000	1	2	9	19	32	49	68	91	116	145	176	210	246	286
3000	1	4	13	28	48	73	102	136	174	217	264	314	269	428
4000	1	5	18	38	64	97	136	181	232	289	351	419	492	571
5000	2	6	22	47	80	122	171	227	291	361	439	524	616	714

NOTES:
Developed length includes piping and fitting.
Shaded cells are strongly not recommended, due to excessive pressure drop.
* Cells signify pipe velocities over 7 ft/sec and are not recommended.

Continuous product improvement is a policy of DriSteem; therefore, product features and specifications are subject to change without notice.