ATOMIZATION PUMP STATION

FACTORY WIRING DIAGRAM WITH VAPOR–LOGIC (SINGLE PHASE)

DATE	REV	RECORD	DR
1/20	C	E.C.# 6877	JK
11/22	D	E.C.# 7131	JK
5/23	E	E.C.# 7166	JK

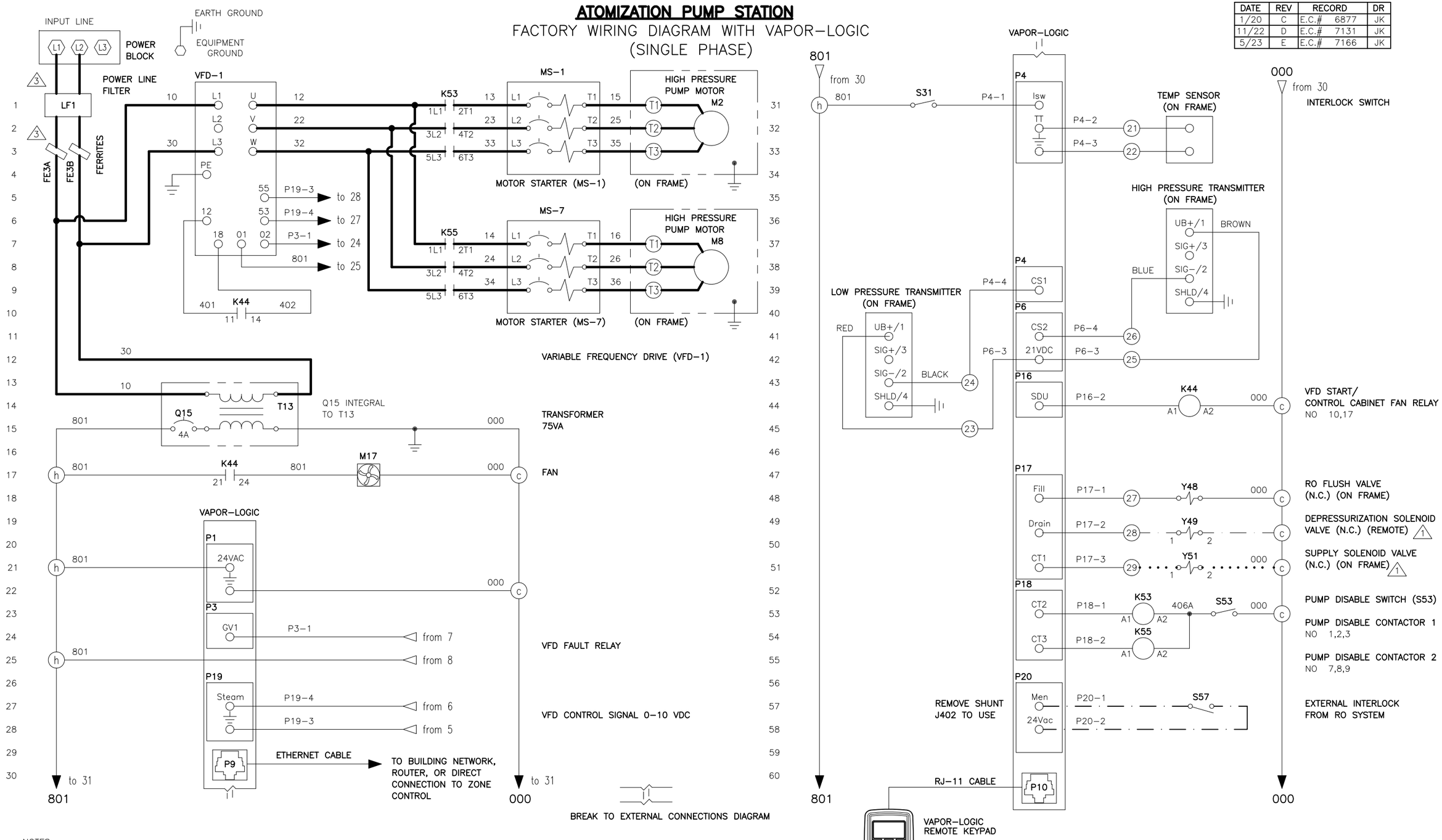

NOTES:

1. SINGLE–ZONE SINGLE STAGE ONLY. REFER TO THE INDIVIDUAL ZONE CONTROLLERS FOR ALL OTHER SYSTEMS.
2. RO STATION BY DRISTEEM ONLY
3. ONLY USED ON CE EUROPE

LEGEND

FE	FERRITE	Y	SOLENOID
LF	LINE FILTER	N	SENSOR
K	RELAY/CONTACTOR	J	JUMPER
T	TRANSFORMER	E	WATER PROBE
Q	CIRCUIT BREAKER	M	MOTOR/FAN
S	SWITCH	MS	MOTOR STARTER
H	HEATER	F	FUSE
VFD	VARIABLE FREQUENCY DRIVE		

POWER WIRING
CONTROL CIRCUIT WIRING
FIELD WIRING
OPTIONAL FACTORY
OPTIONAL FIELD

driSteem

ATOMIZATION REDUNDANT PUMP STATION VAPOR–LOGIC SINGLE PHASE WIRING DIAGRAM

MAT'L:
SCALE:
DRAWN BY: JK
DATE: 5/18/15
P/N HPAS–PS–VL–D