ULTRASONIC HUMIDIFIER

BA–DUCT

FACTORY WIRING DIAGRAM

DATE	REV	RECORD	DR
12/22	A	E.C.# 7138	JK

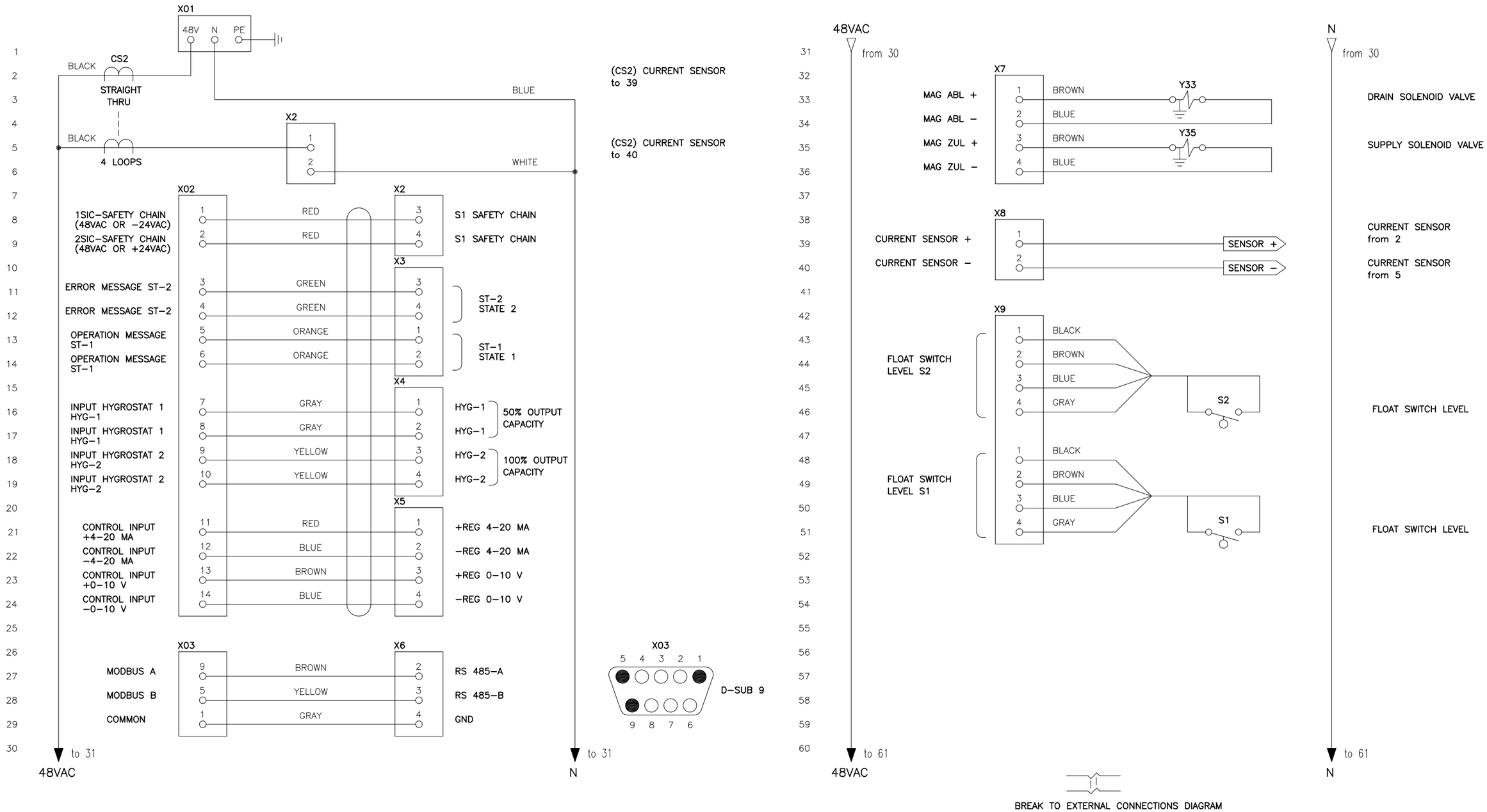

BREAK TO EXTERNAL CONNECTIONS DIAGRAM

LEGEND

FE	FERRITE	Y	SOLENOID
LF	LINE FILTER	N	SENSOR
K	RELAY/CONTACTOR	J	JUMPER
T	TRANSFORMER	E	WATER PROBE
Q	CIRCUIT BREAKER	M	MOTOR/FAN
S	SWITCH	MS	MOTOR STARTER
H	HEATER	F	FUSE
CS	CURRENT SENSOR		
PET	PIEZOELECTRIC TRANSDUCER		

POWER WIRING

CONTROL CIRCUIT WIRING

FIELD WIRING

OPTIONAL FACTORY

OPTIONAL FIELD

ULTRASONIC–2 sht1

driSteem

ULTRASONIC BA DUCT WIRING DIAGRAM	
MAT'L:	
SCALE:	P/N
DRAWN BY: JK	ULTRASONIC–2
DATE: 11/30/22	SHEET 1 OF 2

ULTRASONIC HUMIDIFIER

BA–DUCT

FACTORY WIRING DIAGRAM

DATE	REV	RECORD	DR
12/22	A	E.C.# 7138	JK

POWER WIRING

CONTROL CIRCUIT WIRING

FIELD WIRING

OPTIONAL FACTORY

OPTIONAL FIELD

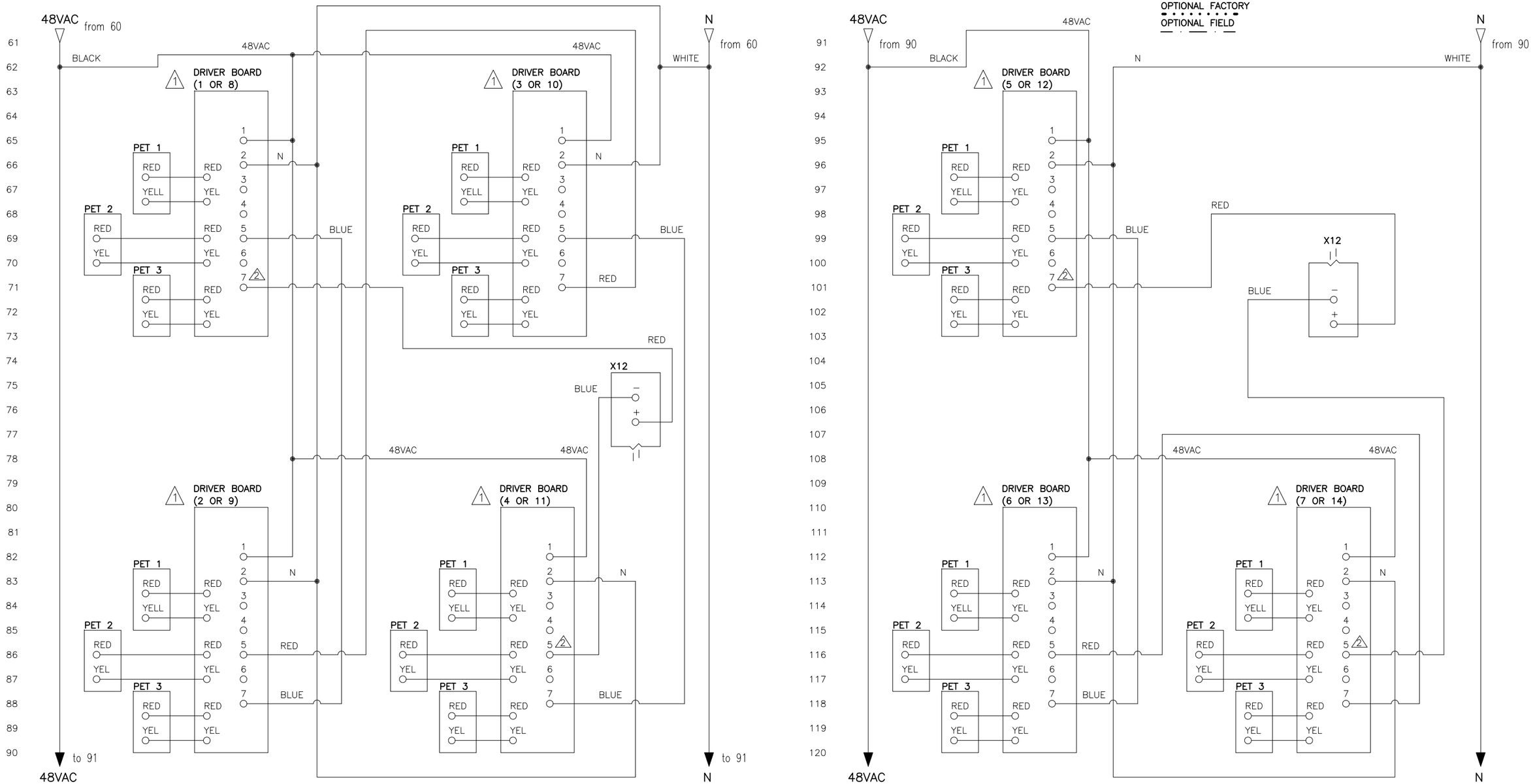

UNIT	TOTAL PETS	TOTAL BOARDS	CONFIGURATION PETS/BOARD	CONFIGURATION # of BOARDS	DRIVER BOARDS CONNECTED PER X12 OUTPUT (BA) 1 +	2 –	3 +	4 –	5 +	6 –	7 +	8 –
BA–06	6	2	3/1	2	1		1		–		–	
BA–12	12	4	3/1	4	1		1		1		1	
BA–18	18	6	3/1	6	2		2		1		1	
BA–24	24	8	3/1	8	2		2		2		2	
BA–30	30	10	3/1	10	3		3		2		2	
BA–36	36	12	3/1	12	3		3		3		3	
BA–42	42	14	3/1	14	4		4		3		3	

1. SHOWNING DRIVER BOARDS 1 THRU 7, FOR 8 THRU 14 BOARDS, DUPLICATE WIRING.

2. DRIVER BOARD ACTIVATION SIGNAL WIRING (X12 + AND – OUTPUTS) IS DEPENDENT ON DRIVER BOARD GROUPING. THE X12 + SIGNAL ALWAYS CONNECTS TO PIN 7 ON THE FIRST DRIVER BOARD IN A GIVEN GROUP. THE X12 – SIGNAL ALWAYS CONNECTS TO PIN 5 ON THE LAST BOARD OF THE GROUP. REMAINING PIN 5 & 7 CONNECTIONS CASCADE THROUGH INTERMEDIATE BOARDS AS DETAILED ABOVE.

LEGEND

FE	FERRITE	Y	SOLENOID
LF	LINE FILTER	N	SENSOR
K	RELAY/CONTACTOR	J	JUMPER
T	TRANSFORMER	E	WATER PROBE
Q	CIRCUIT BREAKER	M	MOTOR/FAN
S	SWITCH	MS	MOTOR STARTER
H	HEATER	F	FUSE
PET	PIEZOELECTRIC TRANSDUCER		

BREAK TO EXTERNAL CONNECTIONS DIAGRAM

driSteem

ULTRASONIC BA DUCT WIRING DIAGRAM

MAT'L:

SCALE:

DRAWN BY: JK

DATE: 11/30/22

P/N ULTRASONIC–2 SHEET 2 OF 2

ULTRASONIC–2 sht2