VAPORSTREAM® VLDI EVAPORATIVE HUMIDIFIER
SSR SEQUENCING MOD. WITH SDU/AREA & TRANSFORMER

DATE	REV	RECORD	DR
5/15	A	E.C.# 6396	JK
6/17	B	E.C.# 6575	JK

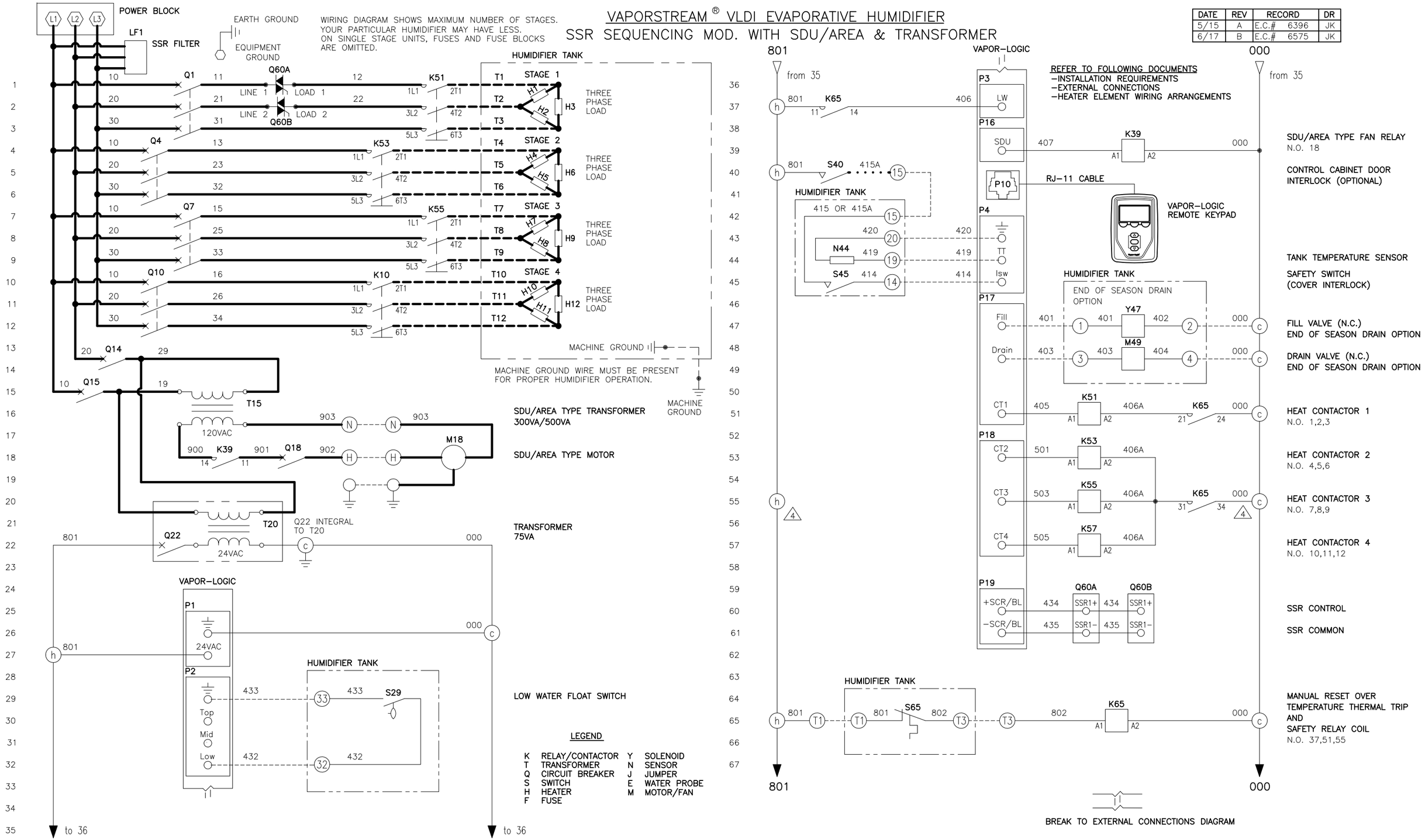

LEGEND

K	RELAY/CONTACTOR	Y	SOLENOID
T	TRANSFORMER	N	SENSOR
Q	CIRCUIT BREAKER	J	JUMPER
S	SWITCH	E	WATER PROBE
H	HEATER	M	MOTOR/FAN
F	FUSE		

POWER WIRING
CONTROL CIRCUIT WIRING
FIELD WIRING
OPTIONAL FACTORY
OPTIONAL FIELD

NOTES:

1. WIRING AND BRANCH CIRCUIT PROTECTION PROVIDED BY INSTALLER AS PER NATIONAL ELECTRICAL CODE.
2. FOR SUPPLY HEATER AND MACHINE GROUND CONNECTIONS, SIZE WIRE USING 75°C WIRE TABLE PER NATIONAL ELECTRICAL CODE.
3. USE COPPER CONNECTORS RATED FOR 105°C.
4. REFER TO AUXILIARY TRANSFORMER WIRING DIAGRAM FOR ALL MULTIPLE STAGE WITH HIGH VA DRAW, WHEN TWO TRANSFORMERS ARE PRESENT.
5. REFER TO VLC ELECTRICAL DATA SHEET.

driSteem

EUROPEAN VLDI, DI WATER
SSR SEQ, SDU W/TRANSFORMER
WIRING DIAGRAM

MAT'L:
SCALE:
DRAWN BY: JK
DATE: 5/1/15
P/N VLC-CE-VL-13