VAPORSTREAM® VLC EVAPORATIVE HUMIDIFIER
ON–OFF/TP MODULATION (NO SDU/AREA)

DATE	REV	RECORD	DR
3/13	B	E.C.# 6053	JK
1/14	C	E.C.# 6172	JK

REFER TO FOLLOWING DOCUMENTS
–INSTALLATION REQUIREMENTS
–EXTERNAL CONNECTIONS
–HEATER ELEMENT WIRING ARRANGEMENTS

WIRING DIAGRAM SHOWS MAXIMUM NUMBER OF STAGES. YOUR PARTICULAR HUMIDIFIER MAY HAVE LESS. ON SINGLE STAGE UNITS, FUSES AND FUSE BLOCKS ARE OMITTED.

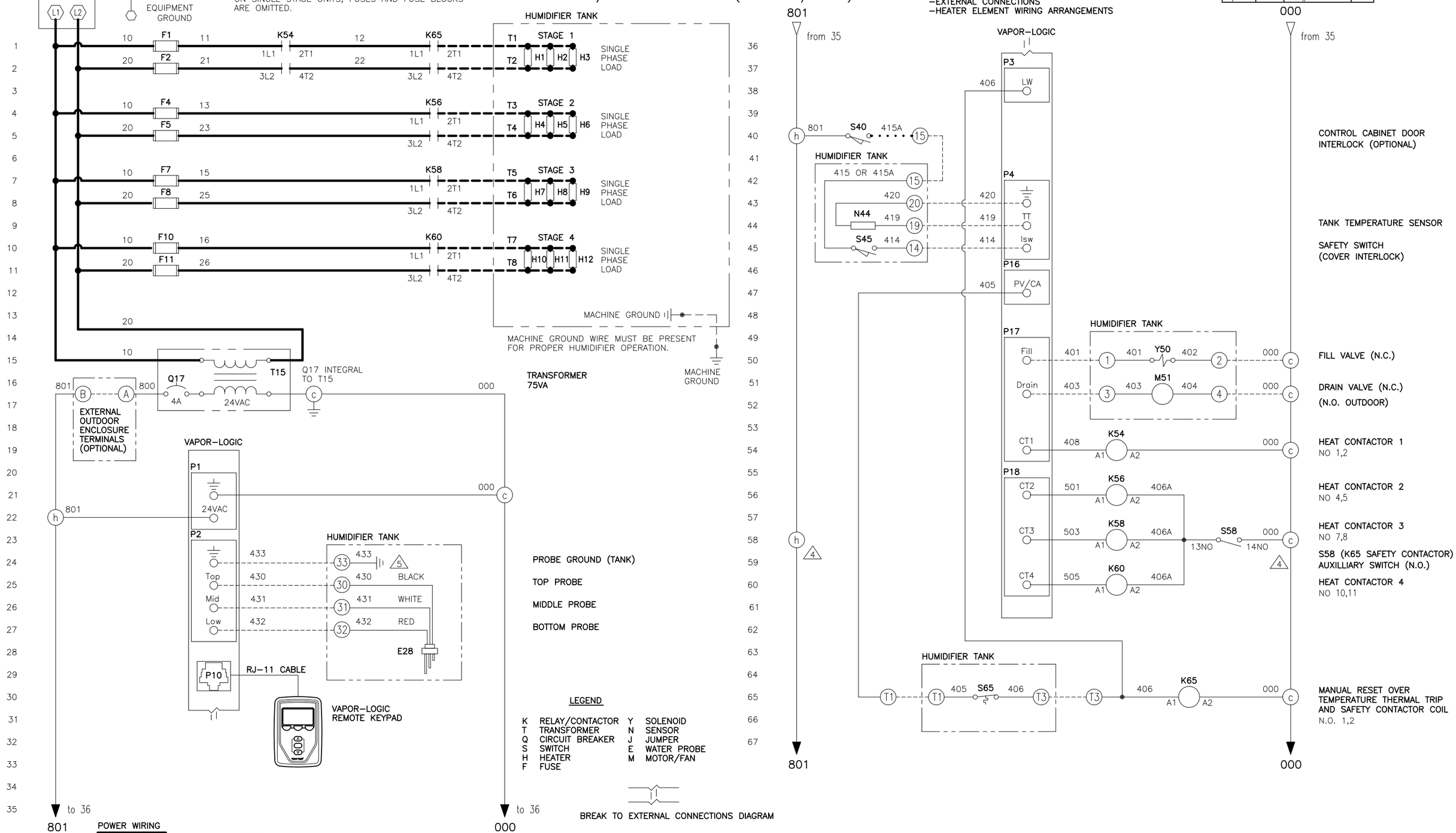

LEGEND

K	RELAY/CONTACTOR	Y	SOLENOID
T	TRANSFORMER	N	SENSOR
Q	CIRCUIT BREAKER	J	JUMPER
S	SWITCH	E	WATER PROBE
H	HEATER	M	MOTOR/FAN
F	FUSE		

BREAK TO EXTERNAL CONNECTIONS DIAGRAM

POWER WIRING
CONTROL CIRCUIT WIRING
FIELD WIRING
OPTIONAL FACTORY
OPTIONAL FIELD

NOTES:

1. WIRING AND BRANCH CIRCUIT PROTECTION PROVIDED BY INSTALLER AS PER NATIONAL ELECTRICAL CODE.
2. FOR SUPPLY HEATER AND MACHINE GROUND CONNECTIONS, SIZE WIRE USING 75°C WIRE TABLE PER NATIONAL ELECTRICAL CODE.
3. USE COPPER CONNECTORS RATED FOR 105°C.
4. REFER TO AUXILIARY TRANSFORMER WIRING DIAGRAM FOR ALL MULTIPLE STAGE WITH HIGH VA DRAW, WHEN TWO TRANSFORMERS ARE PRESENT.
5. WATER LEVEL PROBE GROUND MUST BE CONNECTED TO TANK FOR PROPER HUMIDIFIER OPERATION.
6. REFER TO VLC ELECTRICAL DATA SHEET.

driSteem

VLC, STANDARD WATER DIAGRAM	
MAT'L:	
SCALE:	P/N
DRAWN BY: KROG	VLC–VL5–17
DATE: 1/2/13	