VAPORSTREAM® VLDI EVAPORATIVE HUMIDIFIER
100% (DUAL) SSR MOD, DUAL-VOLTAGE WITH SDU/AREA

REFER TO FOLLOWING DOCUMENTS
- INSTALLATION REQUIREMENTS
- EXTERNAL CONNECTIONS
- HEATER ELEMENT WIRING ARRANGEMENTS

DATE	REV	RECORD	DR
3/13	B	E.C.# 6053	JK
1/14	C	E.C.# 6172	JK

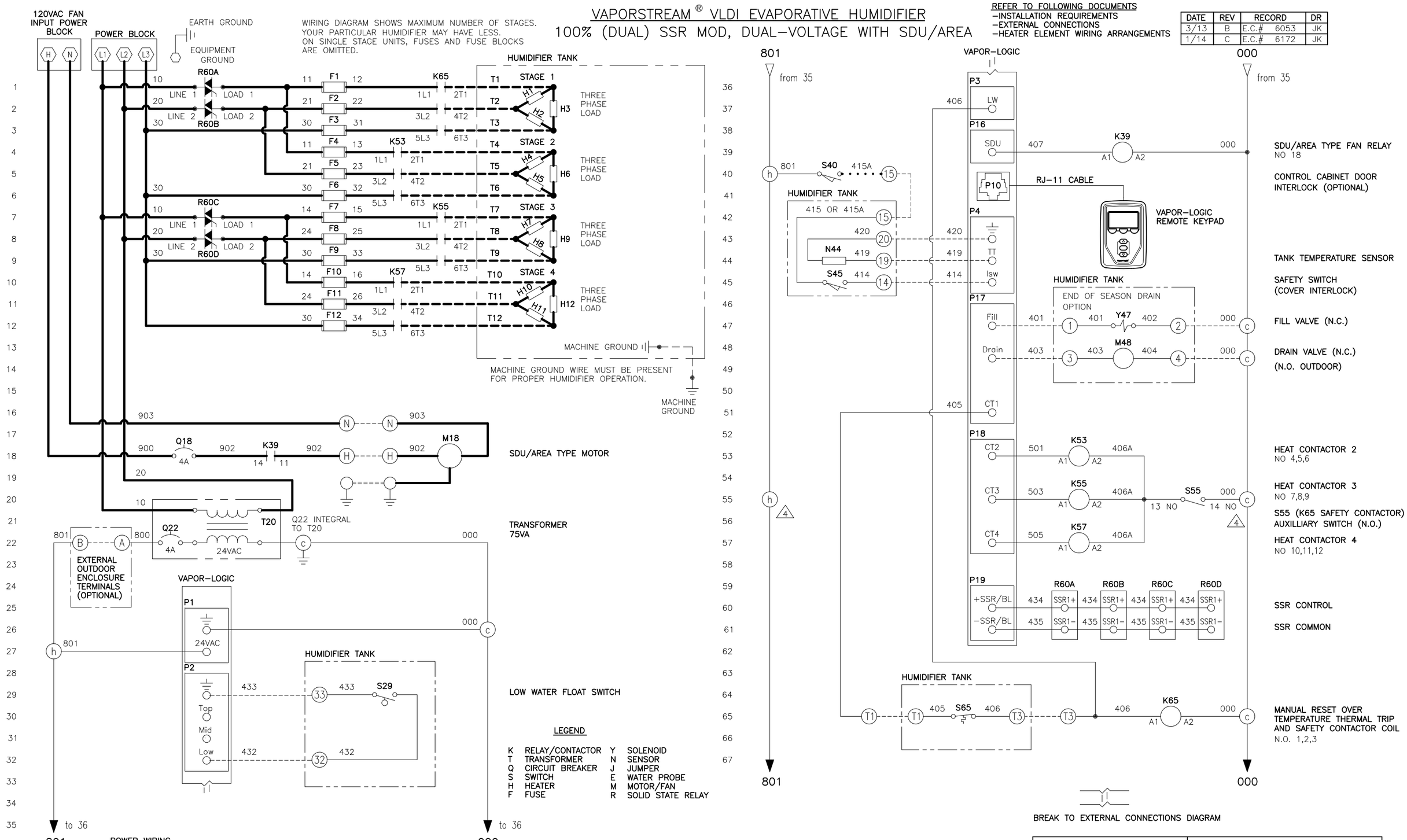

LEGEND

K	RELAY/CONTACTOR	Y	SOLENOID
T	TRANSFORMER	N	SENSOR
Q	CIRCUIT BREAKER	J	JUMPER
S	SWITCH	E	WATER PROBE
H	HEATER	M	MOTOR/FAN
F	FUSE	R	SOLID STATE RELAY

POWER WIRING
CONTROL CIRCUIT WIRING
FIELD WIRING
OPTIONAL FACTORY
OPTIONAL FIELD

NOTES:

1. WIRING AND BRANCH CIRCUIT PROTECTION PROVIDED BY INSTALLER AS PER NATIONAL ELECTRICAL CODE.
2. FOR SUPPLY HEATER AND MACHINE GROUND CONNECTIONS, SIZE WIRE USING 75°C WIRE TABLE PER NATIONAL ELECTRICAL CODE.
3. USE COPPER CONNECTORS RATED FOR 105°C.
4. REFER TO AUXILIARY TRANSFORMER WIRING DIAGRAM FOR ALL MULTIPLE STAGE WITH HIGH VA DRAW, WHEN TWO TRANSFORMERS ARE PRESENT.
5. REFER TO VLC ELECTRICAL DATA SHEET.

VLDI, DI WATER, DUAL VOLTAGE POWER, (2) SSR'S, SDU DIAGRAM

MAT'L:
SCALE:
DRAWN BY: KROG
DATE: 1/7/13
P/N VLC-VL5-49

driSteem