VAPORSTREAM® VLC EVAPORATIVE HUMIDIFIER
100% (MULTI) SSR MOD W/SDU/AREA & TRANSFORMER

REFER TO FOLLOWING DOCUMENTS
–INSTALLATION REQUIREMENTS
–EXTERNAL CONNECTIONS
–HEATER ELEMENT WIRING ARRANGEMENTS

DATE	REV	RECORD	DR
1/13	A	E.C.# 5985	JK

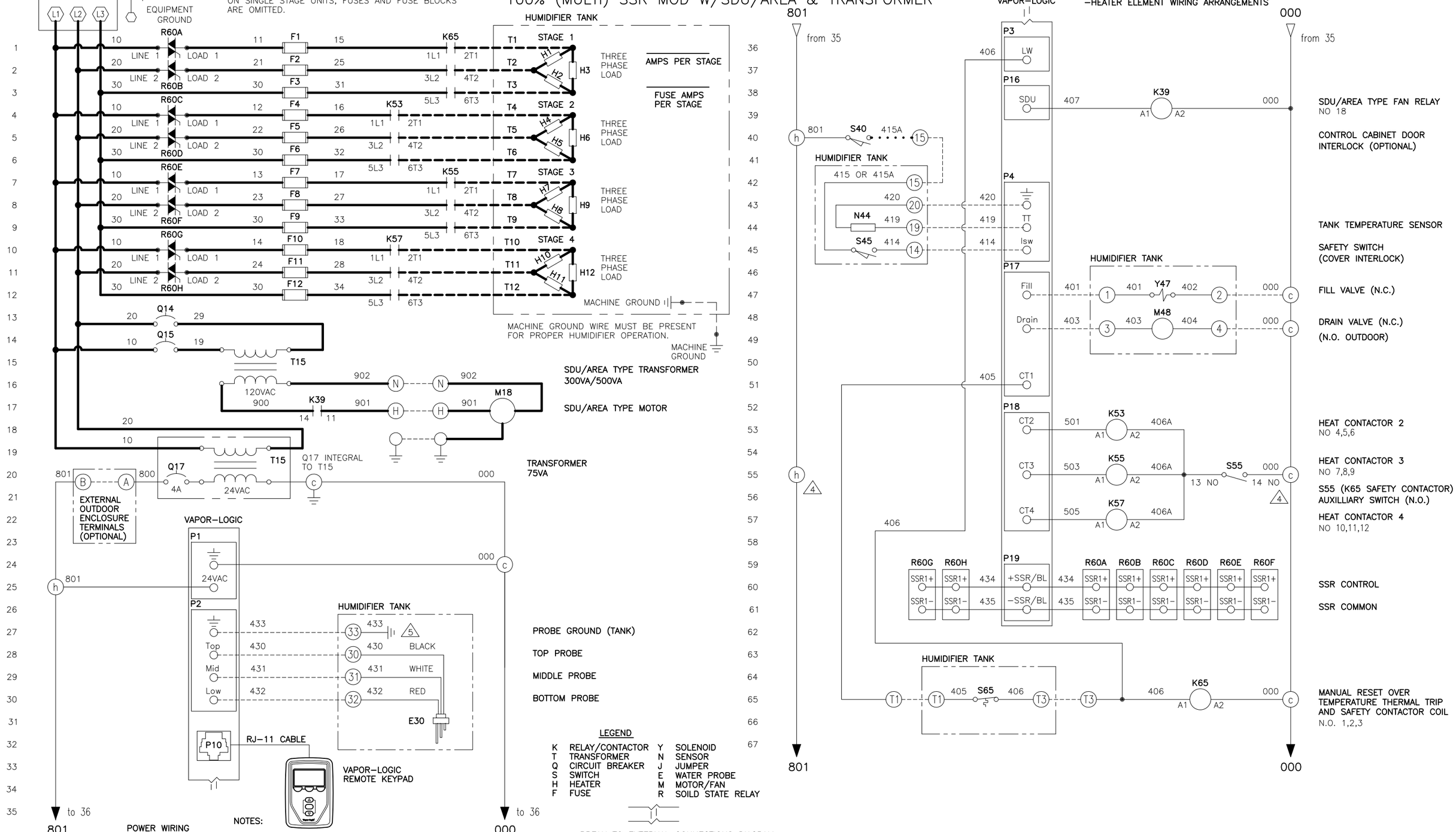

LEGEND

K	RELAY/CONTACTOR	Y	SOLENOID
T	TRANSFORMER	N	SENSOR
Q	CIRCUIT BREAKER	J	JUMPER
S	SWITCH	E	WATER PROBE
H	HEATER	M	MOTOR/FAN
F	FUSE	R	SOILD STATE RELAY

BREAK TO EXTERNAL CONNECTIONS DIAGRAM

POWER WIRING
CONTROL CIRCUIT WIRING
FIELD WIRING
OPTIONAL FACTORY
OPTIONAL FIELD

NOTES:
1. WIRING AND BRANCH CIRCUIT PROTECTION PROVIDED BY INSTALLER AS PER NATIONAL ELECTRICAL CODE.
2. FOR SUPPLY HEATER AND MACHINE GROUND CONNECTIONS, SIZE WIRE USING 75°C WIRE TABLE PER NATIONAL ELECTRICAL CODE.
3. USE COPPER CONNECTORS RATED FOR 105°C.

5 WATER LEVEL PROBE GROUND MUST BE CONNECTED TO TANK FOR PROPER HUMIDIFIER OPERATION.

4 REFER TO AUXILIARY TRANSFORMER WIRING DIAGRAM FOR ALL MULTIPLE STAGE WITH HIGH VA DRAW, WHEN TWO TRANSFORMERS ARE PRESENT.

MODEL: _____
ORDER NO: _____
PRIMARY VOLTAGE: _____ PH: 3 HZ: 50/60
TOTAL UNIT AMPS: _____

DRISTEEM®

DOMESTIC VLC, STD, MULTI SSR SDU/AREA, W/TRANSFORMER
MAT'L:
SCALE:
DRAWN BY: KROG
DATE: 1/3/13
P/N VLC–VL5–84